Surron®

Scan the QR code for the online Owner's Manual
www.surron.com

HYPER BEE

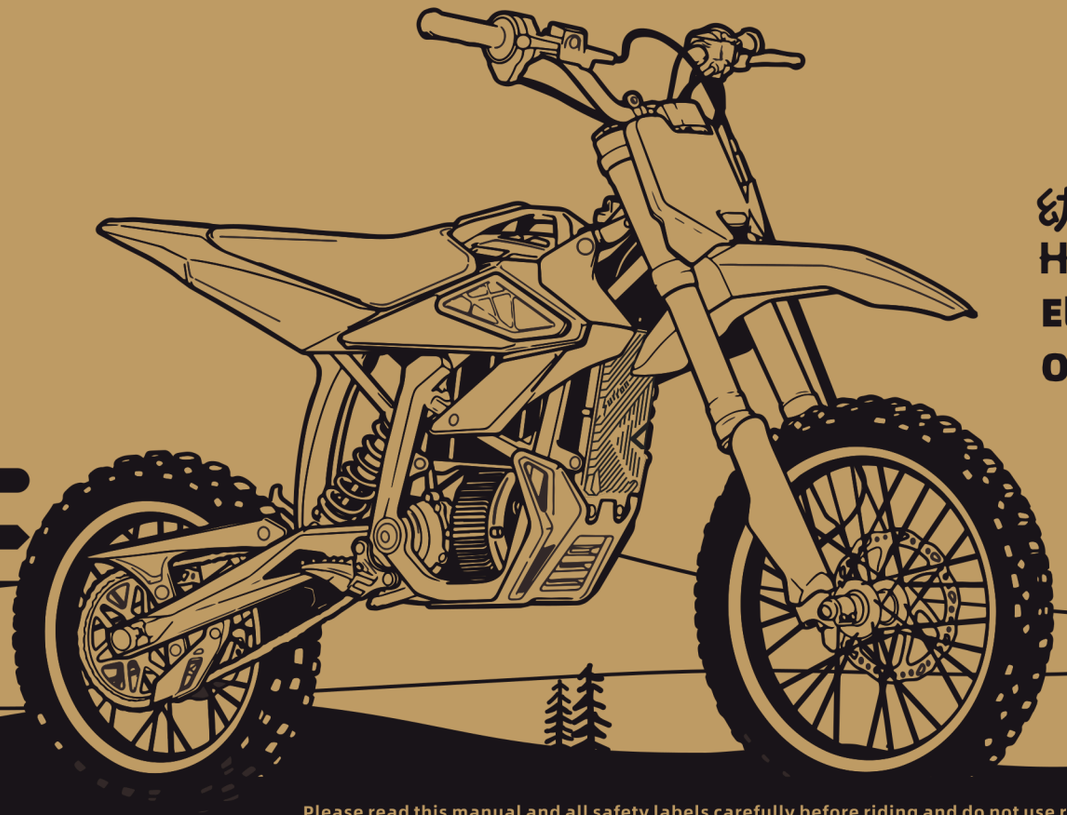

Surron

幼蜂
HYPER BEE
Electric Motorcycles
Owner's Manual

Manufacturer: CHONGQING QIULONG TECHNOLOGY CO., LTD
Address: No.30 Xinkang Road, Dadukou District, Chongqing City, China
Post Code: 400082 Tel:+86-023-68905603
Version: YF-EN-V1.0 Issue Date: 2026.3.17

Please read this manual and all safety labels carefully before riding and do not use ride this electric motorcycles until you understand their characteristicshow to operate it in a safe manner.
Please keep this manual properlyretain this manual for future reference. This manual contains the most current product information available at the time of printing,yourmotorcycle may have slight differences in its look and setup differently from the information supplied in this owner's manual. For the latest function introduction and safety guidelines, please visit ourwebsite:www.surron.com to view the latest revision of your Hyper Bee's owner's manual or go to the official online forum to communicate with other users.

This manual covers the following electric motorcycles: 幼蜂 HYPER BEE

Hyper Bee 2026

Offroad Tires
Front Wheel 60/100-14
Rear Wheel 70/100-12

Riding Tips For Maximum Range

Range varies in Hyper Bee electric motorcycles similarly to how it varies in gas motorcycles. This range variation is principally caused by:

1) initial charge state of your battery;

2) individual riding habits;

3) environmental conditions such as extreme temperatures;

4) riding location characteristics (elevation changes, surface conditions).

Tips to achieve the maximum range please:

•Avoid frequent abrupt acceleration and braking.

•Enable regenerative braking.

•Maintain the correct tire pressure range (Please refer to Standard Tire Pressure Table at page 10.12).

•Remove any unnecessary load.

Note: The range will be varying significantly according to the various tough road conditions during offroad riding.

Table of Contents

Introduction.....1.1
Important Notice.....1.1
Transporting.....1.3

Safety Information.....2.1
Safety Riding Requirement.....2.1
Important Information.....2.2
Location of Important Labels.....2.4

Feature Introduction.....3.1

Display and Indicator.....4.1
Dashboard Overview.....4.1
Dashboard Indicator Introduction.....4.3

Feature Setting.....5.1
Dashboard Setting.....5.1

Table of Contents

Feature Introduction.....6.1
Handlebar controls.....6.1
Power Mode Introduction.....6.3
SURRON Anti-Wheelie Control System (SAWC system).....6.4
Introduction to the indicator of the Hyper Bee Remote.....6.8
Introduction of Hyper Bee Remote Functions.....6.9
Entering Pairing Mode.....6.12
Setting the Motorcycle Power Mode.....6.13
Magnetic cut-off Switch Detachment Alert.....6.14
Battery Pack Removal.....6.15
Battery Pack Installation.....6.16

Starting and Operating.....7.1
Check Before Riding.....7.1
Key Switch.....7.2
Ride the Hyper Bee Electric Motorcycle.....7.3
Front Fork Adjustment.....7.4
Rear Shock Adjustment.....7.5

Power Managemen.....8.1
Battery Pack.....8.1
Power Supply and Charging.....8.3

Power System Management.....9.1
Power System.....9.1

Maintenance.....10.1
Maintenance Item.....10.1
Maintenance Records.....10.1
Scheduled Maintenance.....10.1
Maintenance Schedule.....10.1
Torque Management.....10.3
Battery Pack.....10.9
Brake System.....10.9
Brake Fluld Level Check.....10.9
Brake Disc Inspection.....10.10
Brake Pad Replacement.....10.11
Suspension System.....10.11

Table of Contents

Wheels and Tires.....10.12
Tires Pressure.....10.13
Chain.....10.13
Chain Adjustment Procedure.....10.14
Light Replacement.....10.15
Motorcycle Cleaning.....10.15
Wheel and Tires Cleaning.....10.16
Long-term Storage.....10.16
Hyper Bee Electric Motorcycle Parts.....10.17
Fuse Box.....10.17
Motor Reduction Gearbox.....10.18
Hyper Bee Motorcycle Electrical Schematic Diagram.....10.19

Troubleshooting.....11.1
Hyper Bee Electric Motorcycle Troubleshooting.....11.1
Safety Interlock.....11.1
Precautions for Hyper Bee Electric Motorcycle.....11.1
System Warning Message.....11.2
Troubleshooting.....11.11

Warranty Information.....12.1

Conditions of Warranty.....12.1
Period of Warranty for Surron Motorcycles.....12.1
Parts Covered by the Warranty.....12.2
Warranty Labour Coverage.....12.2
General Exclusion from Warranty.....12.2
Modifications.....12.3
Owners Responsibilities.....12.4
Limitations on Warranty.....12.5
Disclaimer.....12.5
How to Obtain Warranty Service.....12.6

Annex 13.1.....13.1
Maintenance Record.....13.1

After-sales Service Record Sheet.....13.7
Parameters List.....13.9

Important Notice

Congratulations on your decision to purchase a Surron electric motorcycle.

We welcome you to the community of Surron motorcycle riders. You are now the owner of state-of the art electric motorcycle which, with appropriate care, will bring you pleasure for a long time to come.

This electric motorcycle has been designed and built mainly to withstand the normal stresses and strains of offroad use, and only authorized for operation on public roads in its homologated version. This motorcycle must only be used as intended, dangers can be arisen for people, property and the environment through use not as intended.

This manual is designed to provide you with a better understanding of the operation, inspection, basic maintenance requirements, main functions, helpful tips and explain important safety matters of this electric motorcycle. Please read through this Owner's manual carefully, exercise cautiously when riding the motorcycle, and contact Surron or the authorized Surron dealer if you have any questions. For the latest manual updates and additional information about your motorcycle, please visit the official Surron website:

www.surron.com

This manual is intended for personal use only, this manual is not intended for commercial use. To protect your investment, we urge you to take responsibility for keeping your Ultra Bee well maintained. Scheduled service is a must, of course. But it's just as important to observe the break-in guidelines, and preform all the pre-ride and other periodic checks detailed in this manual. This Owner's Manual should be considered a permanent part of this motorcycle and should remain with it even if the motorcycle is subsequently sold. Please make sure the next owner well received the manual, it is, by regulation and law in same countries, regions or states, an important part of the vehicle.

All specifications contained herein are non-binding. This manual contains the word WARNING! to indicate something that could hurt you or others. The terms "right" or "left" in this manual refer to the rider's right or left side when sitting on the motorcycle.

If you have any questions concerning the operation or maintenance of your motorcycle, or if you ever need a special service or repairs, please contact your authorized Surron Motorcycles dealer, and remember that your dealer knows your Ultra Bee best and is dedicated to your complete satisfaction. If the dealer's service cannot meet your requirement, you can also contact Surron's After-sale Service Department for help at any time:

service@qiulongtech.com

Happy riding! We wish you enjoy safe and excellent riding at all times.

WARNING

If the controller, battery pack or motor malfunctioned, please contact the Surron authorized dealer immediately for diagnosis, replacement or maintenance.

WARNING

This product can expose you to chemicals, including lead and BPA, which are known to the State of California to cause cancer or birth defects or other reproductive harm. For more information, go to www.p65warnings.ca.gov.

Changes or modifications not expressly approved by the party responsible for compliance could void the user's authority to operate the equipment.

NOTE

This equipment has been tested and found to comply with the limits for a Class B digital device, pursuant to Part 15 of the FCC Rules. These limits are designed to provide reasonable protection against harmful interference in a residential installation. This equipment generates, uses and can radiate radio frequency energy and, if not installed and used in accordance with the instructions, may cause harmful interference to radio communications. However, there is no guarantee that interference will not occur in a particular installation. If this equipment does cause harmful interference to radio or television reception, which can be determined by turning the equipment off and on, the user is encouraged to try to correct the interference by one or more of the following measures:

1、Reorient or relocate the receiving antenna.

2、Increase the separation between the equipment and receiver.

3、Connect the equipment into an outlet on a circuit different from that to which the receiver is connected.

4、Consult the dealer or an experienced radio/TV technician for help.

Transporting

It is highly recommended that the electric motorcycle be firmly secured on the transport frame using ratchet straps while it is being transported. It is also recommended to use soft straps to reduces scratches or other damages.

It is recommended to fix the ratchet straps according to the points shown in the figure. The front two are tied to the handlebar and the back two are tied to the left and right swing arm. Please do not damage the chain or brake line when tied the straps. The tie down straps should be at a 45° angle from the motorcycle. Please follow the manufacturer's instructions for the ratchet straps you are using.

If you use a truck or motorcycle trailer to transport your Ultra Bee, we recommend that you follow the guidelines below:

1. Use a loading ramp.

2. Secure the motorcycle in an upright position, using motorcycle tie-down straps.

3. Avoid using rope, which can loosen and allow the motorcycle to fall over.

To secure your Ultra Bee, brace the front wheel against the front of the truck bed or trailer rail.

Attach the lower ends of two straps to the tie-down hooks on truck bed or trailer rail. Attach the upper ends of the straps to the handlebar (one on the right side, the other on the left), close to the fork.

Check that the tie-down straps do not contact any control cables or electrical wiring.

Tighten both straps until the front suspension is compressed about half-way. Too much pressure is unnecessary and could damage the fork seals.

Use another tie-down strap to keep the rear of the motorcycle from moving.

We recommend that you do not transport your Ultra Bee on its side. This can damage the motorcycle.

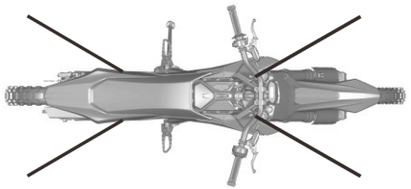

Safety Riding Requirement

Your electric motorcycle can provide many years of service and pleasure if you take responsibility for your own safety and understand the challenges you can meet while riding. There is a lot you can do to protect yourself whilst riding. Be aware that offroad racing is a physically demanding sport that requires more than just a fine motorcycle. To do well, you must be in excellent physical condition and be a skillful rider. For the best results, work diligently on your physical conditioning and practice frequently.

Hyper Bee is a high performance electric motorcycle and should be treated with extreme caution.

Please comply with local laws and regulations, Hyper Bee electric motorcycles are prohibited from riding on public roads. The tires are not made for paved surface use and the motorcycle does not have turn signals or other features required for use on public roads. If you need to cross a paved or public road, use another authorized vehicle to transport or get off the motorcycle and push your motorcycle to your destination.

Proper safety gear, including a regional/national approved helmet, eyewear, riding boots, gloves and protective clothing should be worn while riding to reduce the risk of potential injury. We highly recommend the use of full height motocross boots since the vast majority of motorcycle injuries are due to leg and foot impact.

Please read and ensure that you are aware of all warnings and instructions as well as safety labels in this manual before operating your Hyper Bee electric motorcycle.

Do not allow any person to ride your Hyper Bee electric motorcycle if this person did not completely understand how to safely operate your motorcycle.

Before operating your Hyper Bee electric motorcycle, make sure you are licensed to ride in your selected riding location.

Never consume alcohol or drugs before operating your Hyper Bee electric motorcycle.

Please ride your Hyper Bee electric motorcycle in a responsible manner. Dangerous and reckless riding affects the safety of yourself and the public.

Before each ride, the rider must check all items listed in the " Check Before Riding " section on page 7.1 as well as the battery State of Charge (SoC) percentage.

Your safety depends on the good condition of the Hyper Bee electric motorcycle. Having a breakdown can be difficult, especially if you are stranded offroad far from your base. To help avoid problems, prior to each use, the rider must check everything to compliance with all the periodic maintenance and adjustment requirements contained in the maintenance section of this manual. Make sure you understand the importance of all items that need to be thoroughly checked before riding as it could affect your safety.

Keep your Hyper Bee in safe condition. Use only Surron approved parts and Surron Motorcycles accessories. Maintaining your Hyper Bee properly is critical to your safety. A loose bolt, for example, can cause a breakdown in which you can be seriously injured. Only operate the vehicle when it is in perfect technical condition, in accordance with its intended use, and in a safe and environmentally compatible manner.

Your motorcycle is a high voltage electric motorcycle, follow the safety and caution instruction that apply when using an electric motor. If you smell an unusual odor coming from the lithium-ion (Li-Ion) battery or controller, park your Hyper Bee in a safe place outside and away from flammable objects, then turn off the key switch. Contact your Authorized Surron Dealer to help you to inspect your Hyper Bee immediately.

The rear brake lever is located on the left side of the handlebar. Because this electric motorcycle does not have a manual transmission, there is no clutch and gear shifting.

Modifying a Hyper Bee electric motorcycle may make it unsafe and may cause serious injury to yourself or others. Surron is not responsible for any unauthorized modifications.

Do not load heavy or large objects or adds-on accessories on the Hyper Bee electric motorcycle. Large, bulky items can adversely affect the safety and performance of your Hyper Bee electric motorcycle

Important Information

Several important operational considerations are listed below:

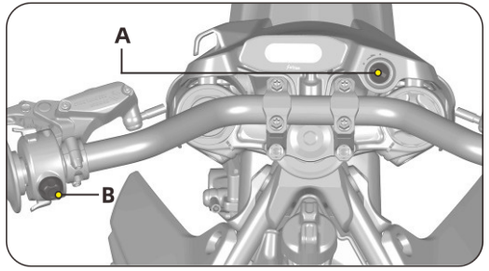

Always turn the key switch(A) to the OFF position and remove the magnetic cut-off switch (B) when not actively riding. It is extremely easy to forget that the motorcycle is still in Ready mode because it is completely silent. An accident might occur if the motorcycle is left powered up and the throttle is inadvertently twisted.

Remove the magnetic cut-off switch and make sure the READY indicator is extinguished when pushing or moving the motorcycle.

Use the brakes when you are stopped on a ramp or steep hill. Do not hold partial throttle to keep the motorcycle stationary on a ramp or steep hill, it can trigger the locked rotor protection, cutting the power to the motor which could cause the motorcycle to move

unexpectedly.

A rechargeable Lithium-ion battery is installed in the motorcycle. The battery pack are located in front of the seat, please recharge the battery pack of your electric motorcycle after each use. Once fully charged, disconnect from AC power supply. Make sure that the charging is carried out in a safe and open space or with monitoring.

When unplugged the battery power plug while the key in the OFF position, the motorcycles electronic components will consume a small amount of power, and the battery pack will drain extremely slowly. If you don't ride for a long-term period of time (30 days or more), you may need to charge the electric motorcycle

CAUTION

Only charge the Hyper Bee lithium-ion battery pack with the motorcycle's original charger or the Surron approved charger. Only use the battery pack while it is inside the motorcycle

for a few hours prior to your next ride. The battery pack will be damaged if it is stored for a long time under low power.

The battery pack does not require nor benefit from deep discharging. To get the most battery pack lifecycle, recharge the battery pack after each ride. Constantly leaving the battery pack in a deep discharging state will damage the battery cell.

Failure to follow instructions of battery pack storage and charging as written in this manual may void the warranty of your Hyper Bee electric motorcycle. These guidelines have been rigorously tested to ensure maximum battery pack efficiency and service. Note: The battery pack contains components and elements that might harmful the environment, please dispose the battery pack properly and in compliance with the applicable regulations. Never throw the battery into the household trash bin.

Location of Important Labels

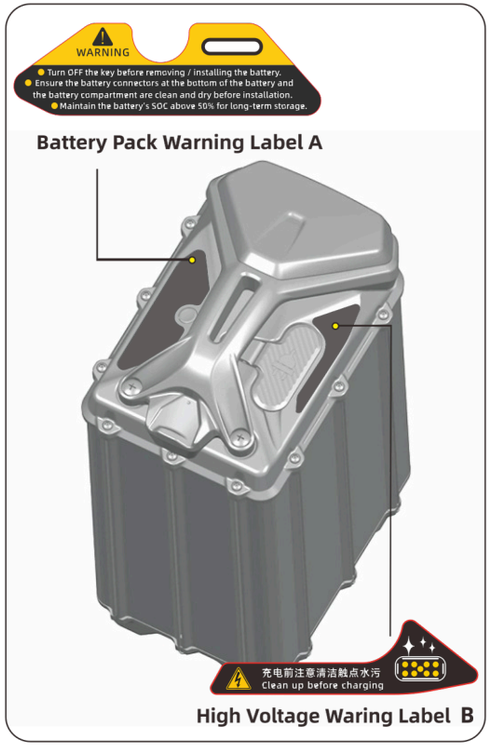

Battery Pack Warning Label A

High Voltage Waring Label B

MCU recommended torque label A
MCU info label B

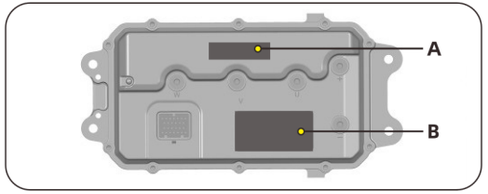

Frame Nameplate A, VIN B

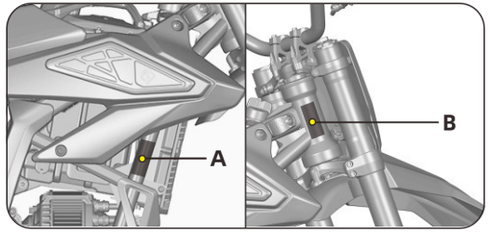

Motor Serial Number A

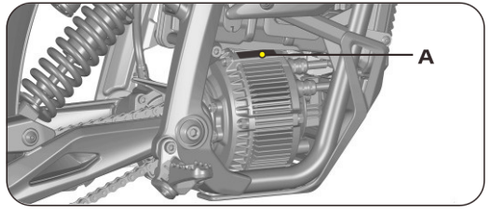

Rinding Warning Label A

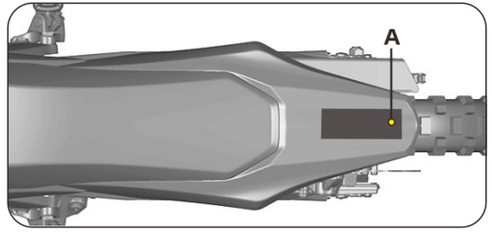

FCC Label A

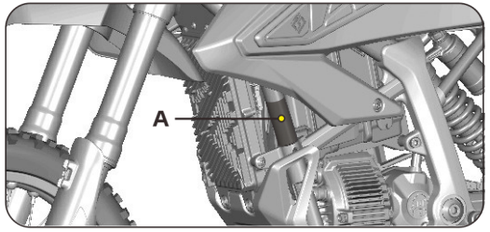

Tire and chain label A

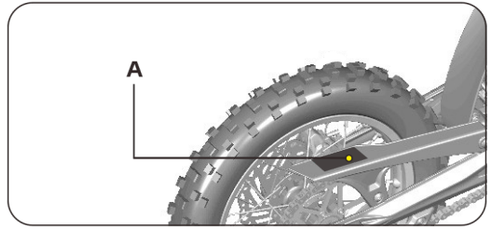

T-box S/N Label A T-box SIM Label B

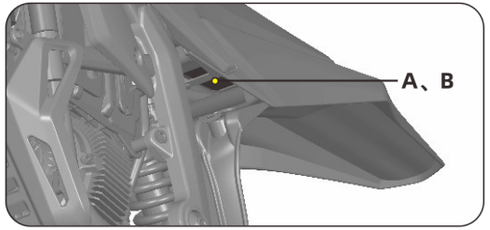

T-box S/N Label

T-box SIM Label

Vehicle VIN Label

If your vehicle has T-box installed, please visit the Download Center of Surron official website. Download the Surron App, install and connect the device to use.

Scan this QR code to enter the Download Center

Safety Information

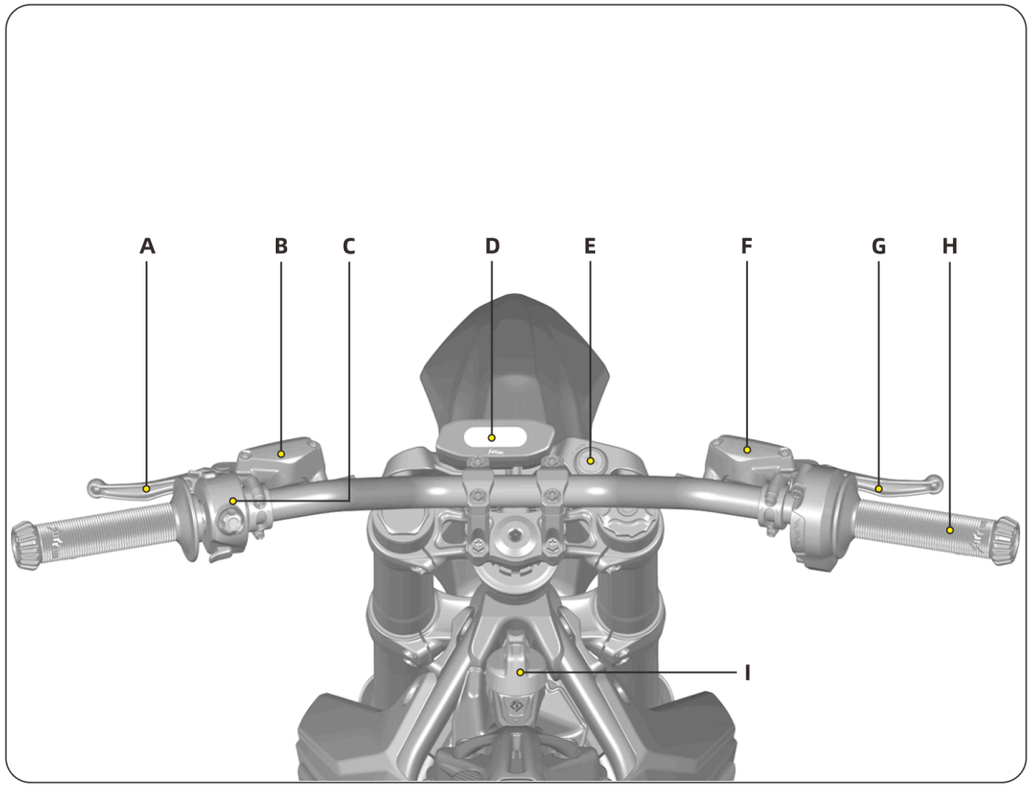

Feature Introduction

A. Rear Brake Lever

For description and operation， please refer to "Feature Introduction"， on page 6.1.

B. Rear Brake Fluid Reservoir

For description and operation， please refer to "Maintenance"， on page 10.5.

C. Left Combination Switch

For description and operation， please refer to "Feature Introduction"， on page 6.1.

D. Dashboard

For description and operation， please refer to "Display and Indicator" ， on page 4.1. and "Feature Setting"， on page 5.1.

E. Key Switch

For description and operation， please refer to "Starting and Operating"， on page 7.2.

F. Front Brake Fluid Reservoir

For description and operation， please refer to "Maintenance"， on page 10.5.

G. Front Brake Lever

For description and operation， please refer to "FeatureIntroduction"， on page 6.3.

H. Throttle Control

For description and operation， please refer to "Feature Introduction"， on page 6.3.

I. Battery pack locking knob switch

Mechanism to lock and release the battery pack by rotary knob switch and locking block. For description and operation， please refer to "Feature Introduction"， on page 6.3.

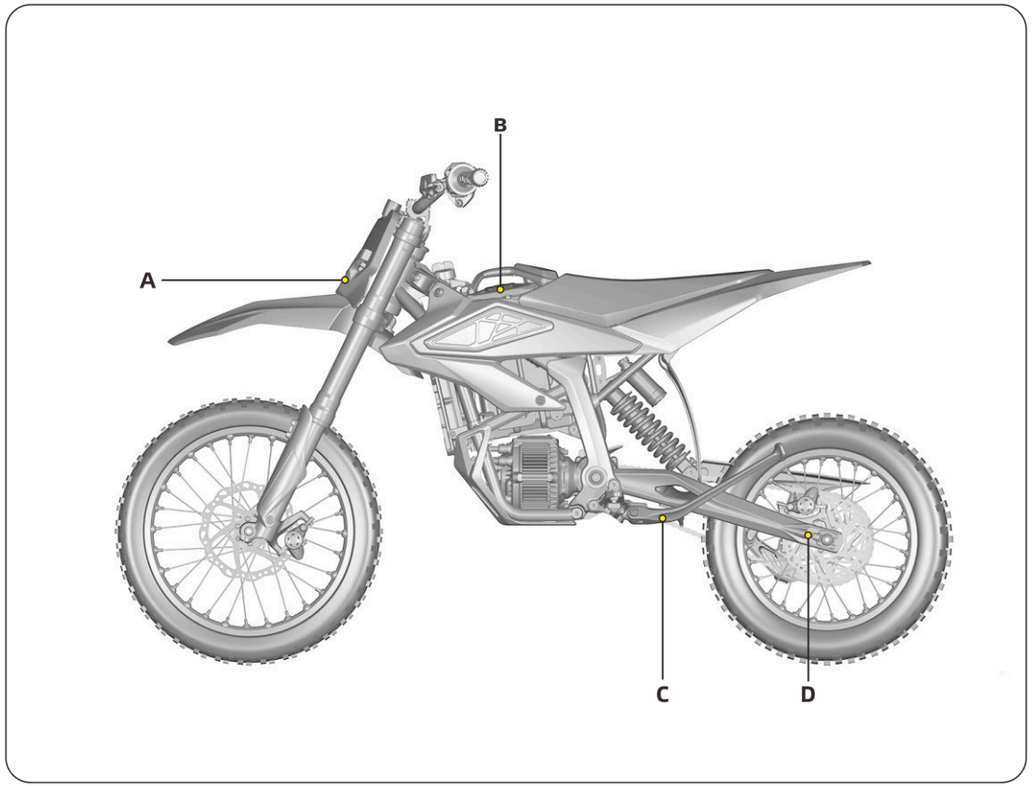

Feature Introduction

A. Headlight

For headlight operation, please refer to "Feature Introduction", on page 6.1.

For headlight replacement，please refer to "Maintenance"， on page 10.12.

B. Magnetic Battery Charging Port

For description and operation， please refer to "Power Management"， on page 8.1.

C. Side Stand

This function is used to support the vehicle when parking the Hyper Bee electric motorcycle. When parking the vehicle, the key switch should be in OFF position.

NOTE

Please Park the vehicle on flat, hard ground, otherwise the motorcycle may fall over and be damaged

D.Chain Adjuster

Located on left and right side of the swingarm， for the tension adjustment procedure， please refer to "Maintenance"，on page 10.9.

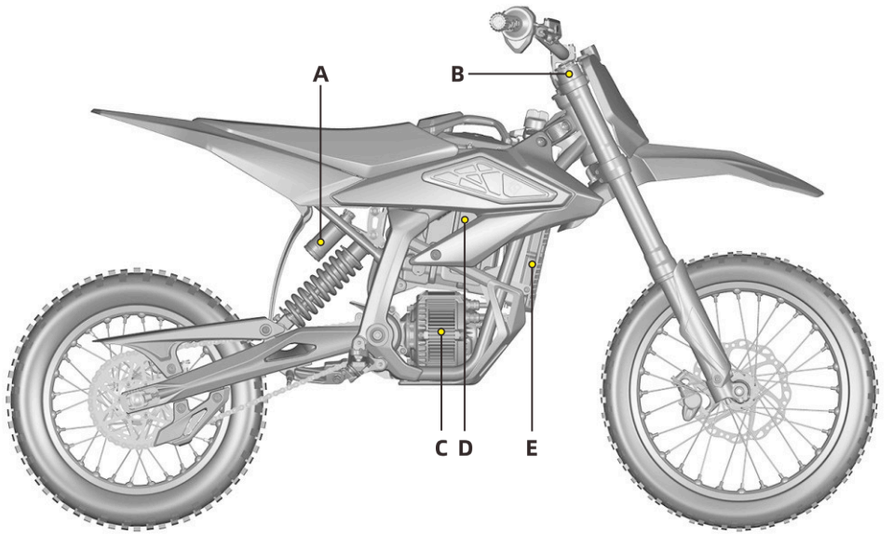

Feature Introduction

A. Rear Shock Absorber

For description and operation， please refer to “ Starting and Operating” ， on page 7.8.

B. Front Fork

For description and operation， please refer to "Starting and Operating"， on page 7.7.

C. MCU

For description and operation， please refer to "Power System Management"， on page 9.1.

D. Battery Pack

For description and operation， please refer to "Power Management"， on page 8.1.

E. Motor

For description and operation， please refer to "Power System Management" ， on page 9.1.

Dashboard introduction

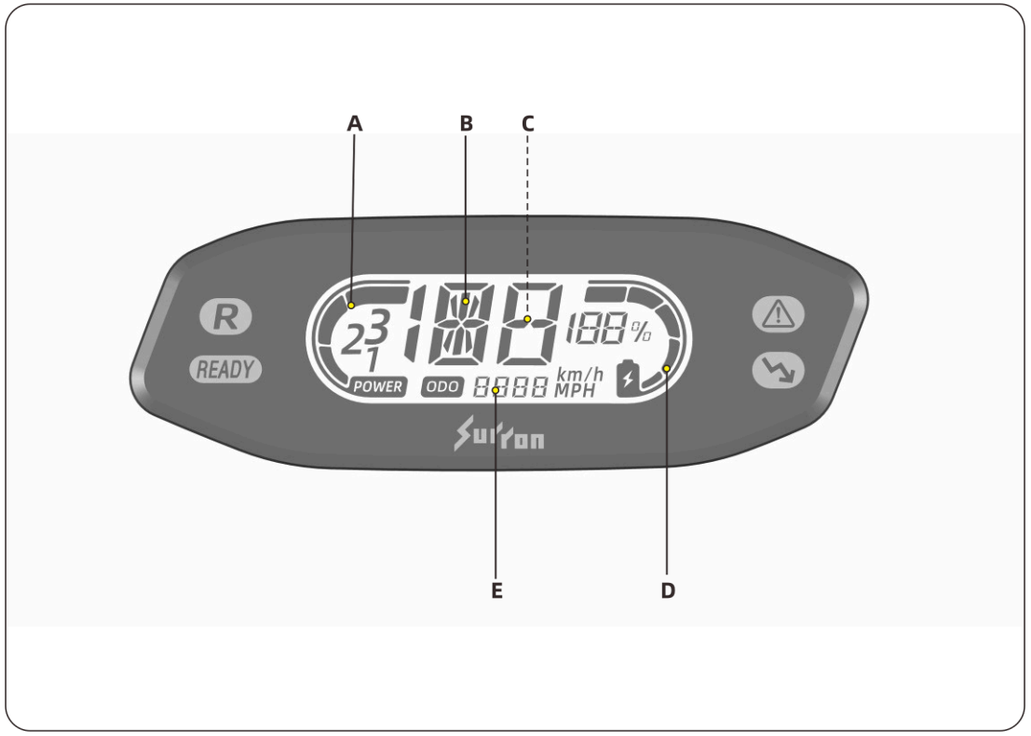

Display and Indicator

A. Power mode

This area displays the power mode corresponding the Power mode of level 1, level 2, level 3.The Power mode can be set using the Hyper Bee remote control or by using a combination of buttons on the left combination switch. For description and operation， please refer to "Feature Introduction"， on page 6.4.

B. Speedometer

The speedometer displays in either kilometers per hour (km/h) or miles per hour (mph).For description and operation， please refer to "Feature Setting"， on page 5.1.

C. Warning Code Display

When a system fault has been detected， the corresponding Warning Code will be displayed in this area. For Warning Code explanation， please refer to "Troubleshooting" on page 11.4.

D. Charge Indicator

This indicator displays the SoC (State of Charge) of your battery pack, which is similar to the fuel gauge on a gasoline powered motorcycle.

E. Odometer

The odometer displays the total distance the motorcycle has been ridden in kilometers or miles. For more information, please refer to page 5.1.

-FETCH LIGHT-飞起来-

Dashboard Indicator Introduction

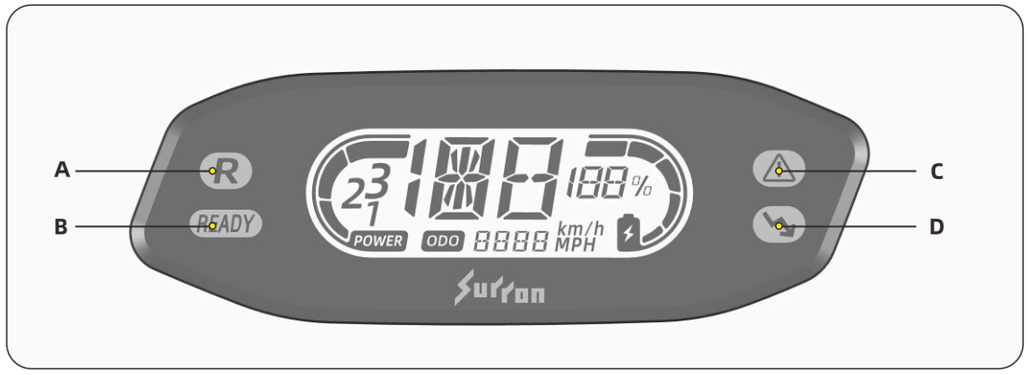

A. Reverse Mode Indicator ®

The indicator illuminates when reverse mode is ready to use; the indicator flashes when the reverse mode is in use; the indicator disappears when the reverse mode is OFF.

B. READY Indicator

This indicator illuminates means the motorcycle is ready to go.

C. System Warning Indicator

The indicator illuminates when a fault has been detected.

Please refer to "Troubleshooting" for detailed Warning Code, on page 11.4.

D.Low Power Indicator

This indicator displays the condition of the power system, will continuously flash when the power system enters low power mode.

Dashboard setting

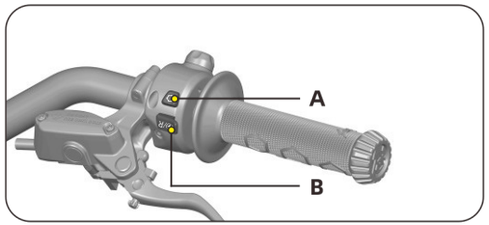

The performance features and displays on the dashboard can be customized to your personal preferences by using the A and B buttons on the Handlebar Control.

A. SET Button

By using the SET button, you can shift between feature setting menus and display relevant vehicle functions.

B. READY Button

To select the vehicle's functions by using the READY button when entered the feature menu.

Speed and odometer unit display

Please refer to the system feature settings for switching between kilometers and miles.



MPH is displayed when Miles per Hour(mph) has been selected.km/h is displayed when Kilometer per Hour (Km/h) has been selected.



Note： Displays one letter in field A (Different letters are displayed according to different feature modes). Display one number in field B (Different Numbers are displayed according to different options within any selected feature).

System Feature Mode setting:

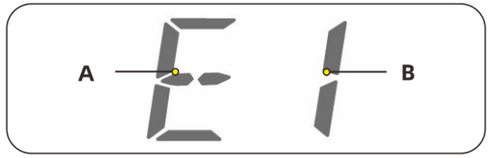

When the vehicle is stationary, powered on and has not been put into the READY state, press and hold the SET button + READY button for more than 2 seconds to enter the system feature mode.

After entering the system feature mode, short press the SET button to shift between vehicle functions such as E2, C1, F1. When the vehicle function is paused, for example at E2, short press the READY button to adjust the level to E3, E0, E1, etc., cycling through in order until the level you want is reached. If there is no button operation after 10 seconds, it will automatically exit and save any changes you have made to your settings.

The available features are listed below:

①Energy regenerative (REGEN) level setting (E0 E1 E2 E3 E4 E5)

Factory default is E2（Feature is disabled in E0, and strengthens in turn from E1 to E5）

②Throttle sensitivity setting (F1 F2 F3)

Factory default is F1(F1 to F3 sensitivity increases in sequence)

③Horn sound setting (G1~Gn)

Factory default is G1（G1~Gn are different sound effects）

④Tilt protection feature setting (C0 C1)

Factory default is C1(Feature is disabled in C0，and activated in C1)

⑤Hyper Bee remote pairing mode（T0 T1）

Factory default is T0(T0 is for pairing mode OFF, T1 is for pairing mode ON)

⑥Bluetooth headset pairing mode（I0 I1）

Factory default is I0(I0 is for Bluetooth headset pairing mode OFF, I1 is for Bluetooth headset pairing mode ON)

⑦Speed unit setting（M1 M2）

Factory default is M0(M1 is in km/h, M2 is in MPH)

⑧SURRON Anti-Wheelie Control System（W0 W1 W2 W3）, Factory Default WO(W0----OFF, Control angles for W1 to W3 gradually increase)

Exit the system feature mode setting:

1.Press and hold the SET button and READY button for more than 2 seconds to exit the system feature mode settings

2.When selecting and adjusting features, the system will automatically exit the system feature mode settings and save any changes you made if there is no operation for approximately 10 seconds

NOTE

When in system feature mode setting, the vehicle cannot be ridden. You need to exit the system feature mode setting and press the READY button to enable your motorcycle to be ridden

Be advised that the tilt sensor can be activated when performing jumps or stunts resulting in an unanticipated loss of power. To extend the life span and the safety of the battery pack, when the battery state of charge (SOC) is over 95% or the battery internal temperature is outside the range of -8°C to 50°C, the energy regenerative function will be disabled, The Alarm AL-128 will appear on the Warning Code Display area

Handlebar controls

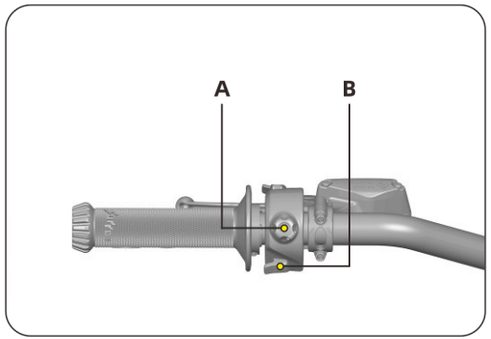

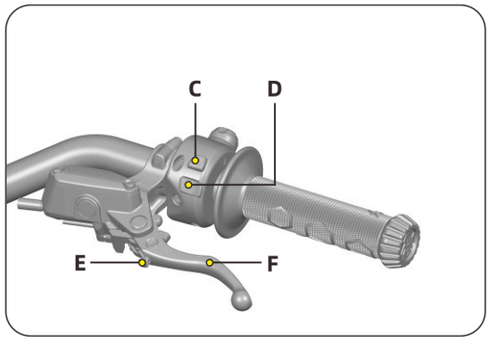

A. Magnetic Cut-off Switch

When the vehicle is in READY condition, removing the Magnetic cut-off switch will cut off the power output of the vehicle.

B. Horn Button

The horn can be used to warn vehicles around you or any other individuals present.

C. SET Button

This button is used for setting system features and switching the display of the dashboard menu.

D. READY Button

This button is a button with three operational functions.

READY MODE: When the motorcycle is powered on, pressing the button enables your motorcycle to be ridden.

REVERSE MODE: When the READY indicator is illuminated and the throttle is in the fully closed position，the motorcycle is stopped， press and hold the READY button， the reverse indicator R on the dashboard will illuminate. Rotating the throttle will cause your Hyper Bee to move backwards. Only when the READY button is released and the throttle is returned to the fully closed position, and the motorcycle is stopped will your motorcycle exit REVERSE MODE and return to the normal riding direction. NOTE: The motorcycle will vibrate slightly as a reminder when entering or exiting reverse mode.

FEATURE SELECT: After entering the system feature mode, you can use the READY button to select the options within any feature. For more details, see page 5.1.

E.Brake Lever Adjuster

Adjustment knob is used to adjust the brake lever position to fit the rider's preference.

F.Rear Brake Lever

When you pull or squeeze the brake lever， it will progressively control the rear brake system. When braking， the throttle should be in the idle position.

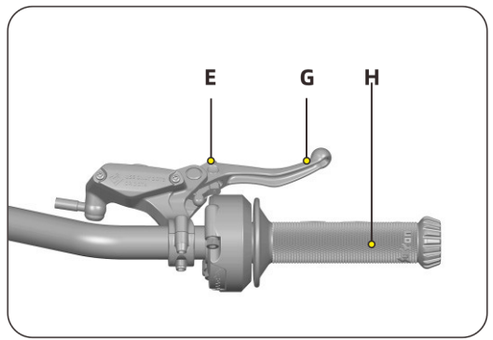

G.Front Brake Lever

When you pull or squeeze the brake lever， it will progressively control the front brake system. When braking， the throttle should be in the idle position.

NOTE

The Hyper Bee electric motorcycle is not equipped with a brake override function, please use braking force cautiously to avoid any injuries

H.Throttle Control

When the motorcycle is in READY state, twisting the throttle in a counterclockwise rotation starts the motor and accelerates the motorcycle in a forward direction. Release the throttle and it snaps back to the idle position will stop powering the motor, remove the magnetic cut-off switch thus decelerating the motorcycle. The throttle sensitivity level can be adjusted in the System Feature Mode.

Power Mode Introduction

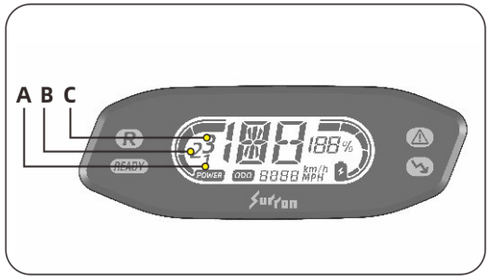

The power mode includes level 1, level 2, level 3, there will be corresponding number showing on the dashboard.

To ensure riding safety, the power mode of the vehicle cannot be switched during the ride.

A. Level 1

In this mode, the vehicle's power and acceleration will be soft and gentle, suitable for the user not familiar with vehicle control or for prolonged slow riding to have maximum control over power delivery.

B. Level 2

In this mode, the vehicle's power and acceleration will be stronger than Level 1. This mode is suitable for a rider who is familiar with power level 1 and the comfortable with the functionality of the motorcycle.

C. Level 3

In this mode, the vehicle has the strongest power output and is suitable for use on off-road surfaces such as a dirt track or trail ride. It is recommended that users use this mode after fully understanding the functionality of the motorcycle.

Power Mode Setting

The vehicle's power mode has three levels, which can be switched by using the Hyper Bee remote. For setting methods, please refer to the Hyper Bee remote function introduction

Feature introduction

SURRON Anti-Wheelie Control System (SAWC system)

The SAWC system functions intelligently, utilizing gyroscope-based posture sensing to mitigate potentially dangerous situations.

The SAWC system can be activated or deactivated by modifying the system function settings. For detailed operating instructions, refer to page 5.2.

The SAWC system includes four levels: W0, W1, W2, and W3. Below are the details for each:

W0 level deactivates the SAWC system system.

W1 level refers to the low pitching-angle level.

W2 level refers to the medium pitching-angle level.

W3 level refers to the high pitching-angle level.

NOTE

1. The SAWC system is designed for riders weighing between 25 and 55 kg.
2. All electronic control systems operate strictly within the mechanical parameters set for the motorcycle.
3. The SAWC system serves exclusively as a safety assistance system with inherent operational and control limitations. It does not substitute the rider's technical proficiency, judgment, or responsibility. Riders are required to fully understand these limitations and practice caution, riding within their skill levels and adjusting to terrain, weather, and other external conditions.
4. Electric motorcycles, compared to traditional fuel-powered ones, are more susceptible to wheelies due to their instant high torque. Riders should properly adjust the wheelie control levels to minimize potential risks.
5. Hyper Bee is equipped with wheel reverse protection for wheelie control. However, when reversing at speeds over 3 km/h, the SAWC system will be temporarily disabled.

-FETCH LIGHT-飞起来-

_____WARNING_____

1. In challenging conditions like off-road terrain or hill jumps, the SAWC system should be deactivated to avoid hindering riding performance.
2. The SAWC system does not eliminate the inherent risks involved in operating a motorcycle. SURRON's responsibility is confined solely to manufacturing or design defects as outlined in the warranty terms. Engaging the SAWC system for practicing or performing competitive techniques is considered voluntary rider action. Any injuries or property damage resulting from such use will be entirely the rider's responsibility, and SURRON will not be held liable in any capacity.

The SAWC system is an optional function and can be turned off.

SURRON clearly mentions:

This system does not guarantee the prevention of accidents or injuries. We will not be held responsible for any property damage arising from the following situations:

1. Performing unconventional driving maneuvers like wheelies.
2. Severe negligence in ignoring clear warnings.
3. Making unauthorized modifications without SURRON's approval.
4. Operates under overload despite explicit warnings.

Feature introduction

_____NOTE_____

1. Liability for personal injury is disclaimed only as allowed by law. This limitation of liability does not extend to damages resulting from product defects.
2. Riders are required to thoroughly read, understand, and agree to all precautions, warnings, and functional limitations detailed in this manual prior to operating the SAWC system. Any improper use or incorrect setup due to a lack of understanding of the system instructions will be the rider's sole responsibility.
3. The SAWC system is not intended to encourage speeding, riding beyond rider's abilities, or engaging in reckless behavior that ignores terrain, weather, load conditions, or relevant regulations. Although the system is designed to minimize the chances of unintentional wheelies, it cannot ensure safety in all extreme riding scenarios. Riders are required to remain cautious and aware of potential risks at all times. The rider assumes full responsibility for any direct or indirect damages caused by ignoring warnings or adopting unsafe riding habits, including but not limited to speeding, reckless driving, riding under the influence, failure to use safety equipment, or disregarding system alerts. Such damages may include personal injury, property damage, or psychological harm. SURRON disclaims any liability for these outcomes to the maximum extent allowed by law. This disclaimer does not affect liability related to personal injury that cannot be excluded under applicable laws.
4. For optimal performance and safety of the SAWC system, it is essential to use original manufacturer-certified components like tires and chains. Using non-certified accessories could diminish the system's effectiveness and potentially lead to safety risks. Any consequences resulting from such usage will be the sole responsibility of the owner.

5. The levels for the SAWC system are functional across all drive modes, it is advised to choose levels and drive modes that align with your riding preferences and the specific terrain conditions.

_____WARNING_____

1. Improper handling or deviation from the system's designated operating procedures may lead to accidents or damage, for which SURRON holds no responsibility.
2. Riders are advised to operate within their skill limits and should not rely entirely on the SAWC system to navigate difficult situations or take unnecessary risks.
3. The SAWC system's performance might be compromised in specific conditions, including loose sand, deep mud, or steep inclines.

Introduction to the indicator of the Hyper Bee Remote

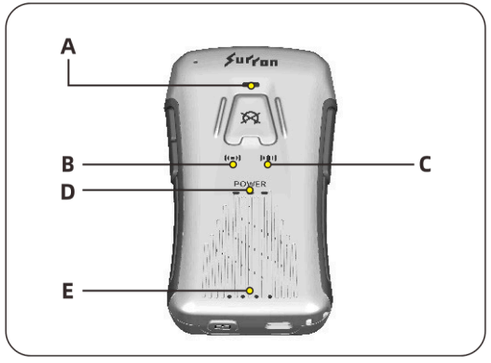

A. Emergency Power Off Indicator

Solid Light: The vehicle's power has been disconnected using the remote.

Flashing Light: The vehicle's power is in the process of being shut off.

Light Off: The vehicle's power is restored.

B. Connection Status Indicator

Flashing Blue: The Hyper Bee Remote is in pairing mode.

Solid Green: The Hyper Bee Remote is successfully paired with a strong signal.

Solid Yellow: The Hyper Bee Remote is paired, but the signal is weak.

Light Off: The Hyper Bee Remote is not paired, or the connection is lost.

C. Microphone Indicator

Solid Light: The Hyper Bee Remote 's microphone is on, and communication with the vehicle is active.

Light Off: The Hyper Bee Remote 's microphone is off.

D. Power Mode Indicator

First Light Solid: Power level 1 is engaged.

First and Second Lights Solid: Power level 2 is engaged.

All Three Lights Solid: Power level 3 is engaged.

E. Hyper Bee Remote Battery Indicator

This indicator displays the current battery level of the Hyper Bee Remote.

Introduction of Hyper Bee Remote Functions

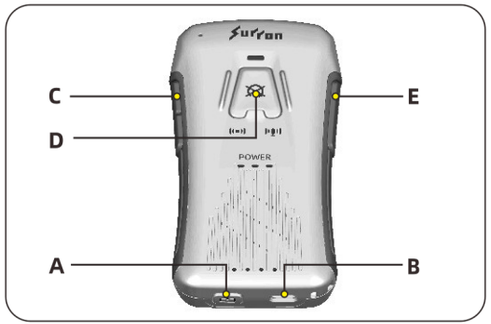

A. Power Button

Hyper Bee Remote Power On: Long press the power button for 2 seconds.

Hyper Bee Remote Power Off: While powered on, long press the power button for 2 seconds.

Hyper Bee Remote Battery Check (When OFF): Short press the power button, and the battery indicator will light up to show the current battery level of the Hyper Bee Remote.

Hyper Bee Remote Motorcycle Pairing Mode (When OFF): Long press the power button and hold until Connection Status Indicator flashing blue light.

B. Charging Port

This is the charging interface for the Hyper Bee Remote.

NOTE

The input power is a 5W USB-C connection (5V/1A). Please use the original accessories for charging and unplug the power promptly after the battery is fully charged to avoid potential battery damage

Please take the Hyper Bee Remote out of the accessory box immediately after receiving the motorcycle and charge the Hyper Bee Remote battery State of Charge (SoC) to full

The Hyper Bee Remote has a built-in lithium battery, to avoid the degradation of the battery's performance due to environmental reasons, please do not use and store it exceed the working temperature range

1. Please use the Hyper Bee Remote within the ambient temperature range of -20℃ (-4℉) ~ 60℃ (140℉).

2. Do not charge the Hyper Bee Remote below 0℃ (32℉) and above 45℃(113℉)

3. Do not store the Hyper Bee Remote with less than 1 bar of the battery level

4. When the Hyper Bee Remote is not use for a long period of time, it is recommended to check the battery level every 3 months and recharge it to more than 3 bars

5. Do not let water flood into the Hyper Bee Remote; Do not get Hyper Bee Remote close to open fire

If you encounter the following situations, please stop charging and disconnect the power supply immediately, and do not use the Hyper Bee Remote, contact after-sales service or immediately:

1, Smell burning during charging

2,The surface temperature of the Hyper Bee Remote is too high

3, The built-in battery of the Hyper Bee Remote is bulging, causing deformation of the remote case

C. Hyper Bee Remote Volume Up/Down Buttons

Short press “+” button to increase the Hyper Bee Remote volume.

Long press “+” button to rise the Power mode level.-
Short press “-” button to decrease the Hyper Bee Remote volume.

Long press “-” button to lower the Power mode level.-
While powered on, long press and hold both the “+” button and “-” button power to switch the audio language of Hyper Bee Remote.

NOTE

Volume adjustment only affects the Hyper Bee Remote volume, not the speaker volume on the vehicle

D. Emergency Power Cut Button

When the Hyper Bee Remote is properly paired and connected to the vehicle, you can short press the emergency power cut button on the Hyper Bee Remote in case of unexpected situations during vehicle use. This will immediately cut off the vehicle’s power output, and the Hyper Bee Remote will audibly announce "Vehicle power OFF," with the emergency power cut indicator showing a steady red light.

After the vehicle's power output is turned Off, the dashboard will display the "NO AL" indicator.

Turn off the vehicle's key switch and turn it back on, and the "NO" symbol will disappear, restoring the vehicle's power to normal.

NOTE

The maximum connection distance of the vehicle and the juvenile bee remote controller is 300 meters. This distance may be shortened due to factors such as weather, environment, and obstacles

E. Hyper Bee Remote MIC Button

When the Hyper Bee Remote is properly connected to the vehicle, press the "MIC" button on the Hyper Bee Remote to start intercom communication. The vehicle's speaker will play the intercom voice from the Hyper Bee Remote. Release the button to end the intercom.

Quickly press the "MIC" button three times in succession to turn on the vehicle dashboard microphone, allowing voice to be transmitted back to the Hyper Bee Remote in real-time. Repeat this operation to turn off the vehicle microphone (the microphone is off by default each time the motorcycle is powered on).

Entering Pairing Mode:-Power on the vehicle and ensure the Hyper Bee Remote is next to the vehicle.

Simultaneously press and hold the SET button and the READY button on the left combination switch for more than 2 seconds to access to the system feature mode.-Short press the SET button to navigate through the system feature mode until the display shows "T0."-Short press the READY button; the display will change from "T0" to "T1" and begin to flash.

While the Hyper Bee Remote is turned off, long press the power button and hold until Connection Status Indicator flashing blue light. The Hyper Bee Remote will play audio to remind the user that the remote is in Motorcycle pairing mode.

At this point, wait for the "T1" on the display to change from flashing to a steady state. The Hyper Bee Remote will audibly confirm successful pairing, and the Connection Status Indicator will illuminate solid green light, indicating that the Hyper Bee Remote and vehicle have been successfully paired. Upon successful pairing, both the motorcycle and the Hyper Bee Remote will automatically exit pairing mode.

Feature introduction

Entering Pairing Mode:

Power on the vehicle and ensure the Hyper Bee Remote is next to the vehicle.-Simultaneously press and hold the SET button and the READY button on the left combination switch for more than 2 seconds to access to the system feature mode.-Short press the SET button to navigate through the system feature mode until the display shows "T0."-Short press the READY button; the display will change from "T0" to "T1" and begin to flash.

While the Hyper Bee Remote is turned off, long press the power button and hold until Connection Status Indicator flashing blue light. The Hyper Bee Remote will play audio to remind the user that the remote is in Motorcycle pairing mode.

At this point, wait for the "T1" on the display to change from flashing to a steady state. The Hyper Bee Remote will audibly confirm successful pairing, and the Connection Status Indicator will illuminate solid green light, indicating that the Hyper Bee Remote and vehicle have been successfully paired. Upon successful pairing, both the motorcycle and the Hyper Bee Remote will automatically exit pairing mode.

NOTE

Once the Hyper Bee Remote is successfully paired with the motorcycle for the first time, subsequent pairing is not required. They will automatically connect when both powered on and are within range

-FETCH LIGHT-飞起来-

Setting the Motorcycle Power Mode:

After successfully connecting the Hyper Bee Remote to the vehicle, and within 3 minutes of powering on the motorcycle while it is stationary, you can switch between the three power mode levels using the Hyper Bee Remote.

Press and hold the volume "+" button on the Hyper Bee Remote for 2 seconds to rise the power mode level. Press and hold the volume "-" button on the Hyper Bee Remote for 2 seconds to lower the power mode level:

-When Level 1 is set, one POWER indicator light on the Hyper Bee Remote will remain lit, and a voice prompt will announce "Power Level 1." The dashboard will display one power bar and the number “1”.

-When Level 2 is set, two POWER indicator lights on the Hyper Bee Remote will remain lit, and a voice prompt will announce "Power Level 2." The dashboard will display two power bars and the number “2”.

-When Level 3 is set, three POWER indicator lights on the Hyper Bee Remote will remain lit, and a voice prompt will announce "Power Level 3." The dashboard will display three power bars and the number “3”.

NOTE

Power mode of the Hyper Bee are only adjustable within 3 minutes of powering on the motorcycle while it is stationary. Hyper Bee Power mode cannot be changed while riding or when the motorcycle is in READY mode

Feature introduction

Magnetic cut-off Switch Detachment Alert:

If the magnetic cut-off switch detaches while the vehicle is in motion, the Hyper Bee Remote will emit a continuous alarm sound.

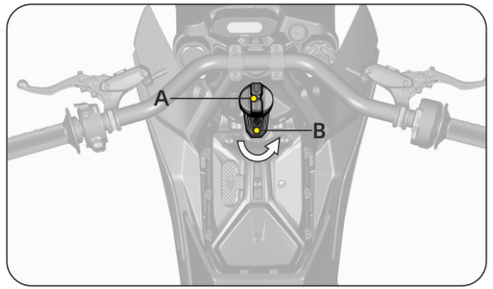

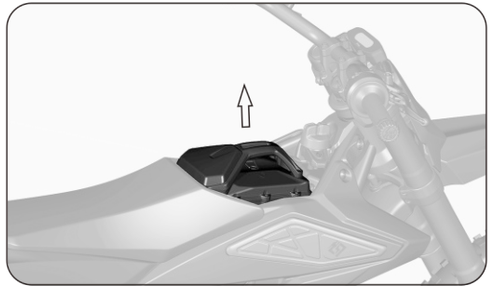

Battery Pack Removal

1. Turn off the key switch

2. Rotate the tightening knob A counterclockwise to move the battery locking arm B fully to its right most position

3. Remove the battery pack upwards along the arrow

WARNING

Before removing or installing the battery pack on the motorcycle, make sure the key switch is in the off position to ensure the vehicle is powered off

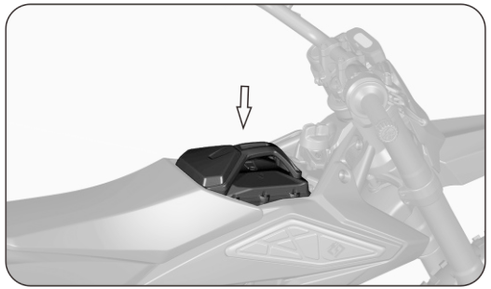

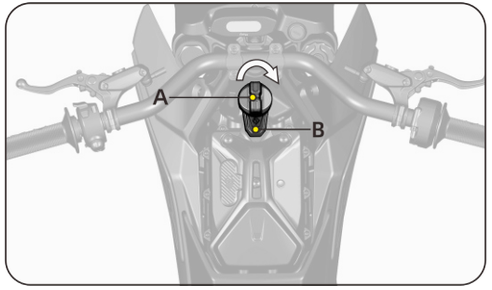

Battery Pack Installation

1.Ensure the battery locking arm is fully to its right most position

2.Put the battery pack in the battery compartment.

3.Rotate the tightening knob A clockwise to move the battery locking arm B is positioned above the battery and tighten the knob to secure the battery pack. Double check that they battery is firmly retained as it may cause vehicle damage or even personal injury during riding if it is loose.

NOTE

When installing the battery pack, ensure that the battery locking arm is on the right side and does not obstruct the installation of the battery pack

Before installing the battery pack, check for any other objects or water in the battery tray and discharge socket. If present, clean them thoroughly before installing the battery pack. Otherwise, it may lead to improper installation of the battery pack or poor contact at the discharge socket, which could result in your motorcycle being damaged

Check Before Riding

Before operating the electric motorcycle， please check the following items to ensure that the Hyper Bee electric motorcycle is safe to operate：

Battery pack

Check that the battery level displayed on the battery pack or dashboard is sufficient for your planned ride. Range is affected by your personal riding style, environmental conditions, and riding terrain, so the battery charge display is for reference only, we recommend you to fully charge before your ride.

Chain

Check the chain tension and condition. Adjust or replace if necessary. Please refer to "Chain" on page 10.9.Brake system

Squeeze the brake levers independently and push the motorcycle each time to ensure the front and rear wheels can be fully locked.

Throttle

When the key switch is in the off position， twist the throttle and release it to check whether the throttle rotates smoothly and returns to idle freely.

Tires

Check the tire pressure and tread depth of the tires.

Check the cold tire pressure， and adjust as necessary to maintain the recommended tire pressure range. Check your tires for damage, abnormal wear, and tread depth. Replace your tires immediately if the minimum tread depth described on page 10.9 is reached.

_____WARNING_____

Incorrect tire pressure is a common cause of tire damage and loss control, resulting in serious personal injury. Check the tires regularly to ensure good tire condition

Electrical System

Check whether the headlight, dashboard and combination switch are functioning properly.

Key Switch

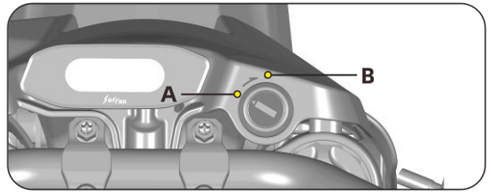

This is a two-position switch located on the right side of the dashboard. The functions listed below：

OFF A

ON B

OFF position

This position is to turn off the Hyper Bee electric motorcycle. The key can also be removed from this position.

ON position

This position is to turn on the Hyper Bee electric motorcycle. The following changes occur when switch is rotated to this location：

Dashboard ON.

Headlight ON.

Operate Key Switch：

1. Insert the key into the key switch and turn clockwise to switch the key from OFF position to ON position，thereby starting the Hyper Bee electric motorcycle.

2. When the Hyper Bee electric motorcycle is started，turn the key counterclockwise to switch the key from ON position to OFF position.

Ride the Hyper Bee Electric Motorcycle

Starting

Turn the key switch from OFF position to the ON position.

Confirm the battery's displayed SoC percentage is suitable for your planned ride.

Reinstall the magnetic cap of the magnetic cutoff switch.

After confirming there are no obstacles or passing vehicles in surrounding area， lift the side stand， press the READY button on the left combination to enter the READY mode (the READY indicator on the dashboard will light up) and twist throttle to increase the speed and begin your ride.

Braking

The brake levers are located on the left and right handlebars.

When you pull the right brake lever， it controls the front brake.

When you pull the left brake lever， it controls the rear brake.

Parking

Reset the throttle to idle position, remove the magnetic cap from the magnetic cut-off switch.

Put side stand down to prevent your motorcycle from falling over.

Turn the key switch to the OFF position and remove the key， and keep it in a safe place.

WARNING

If enough force is suddenly applied to the brakes, it can cause the wheels to lock. This may result in you losing control of the Hyper Bee electric motorcycle and could lead to serious injury or death

Progressively applying force to the brake levers will gradually stop the electric motorcycle without locking the wheels. Your Hyper Bee electric motorcycle is a powerful vehicle, so it is strongly recommended that you practice and get familiar with performing a safe emergency stop

NOTE

After each ride, please check the battery level and charge the battery pack as necessary

Front Fork Adjustment

Rebound damping

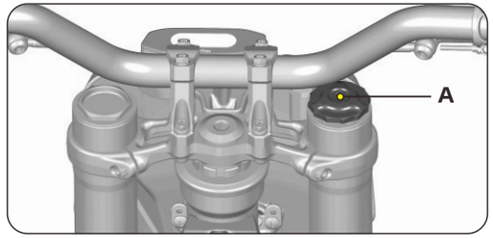

Turning the adjusting knob A clockwise in the "+" direction increases the rebound damping, resulting in a slower rebound speed.

Turn the adjusting knob A counterclockwise in the "-" direction decreases the rebound damping, resulting in a faster rebound speed

NOTE

The appearance of front fork may vary based on different brands supplied with your Hyper Bee, please refer to the actual product

The rebound damping should be adjusted according to the road conditions and the weight of the rider. Avoid adjusting the damping to the maximum limit, otherwise it may cause the front fork to malfunction resulting in an accident and/or serious injury

Rear Shock Adjustment

Compression damping

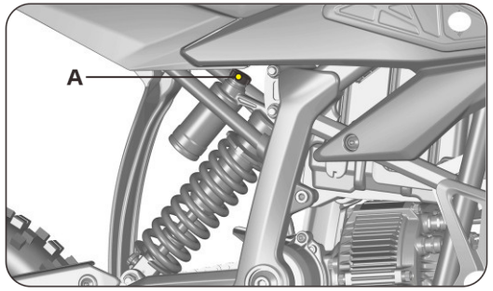

Adjust the compression damping by turning the knob A at the top of the rear shock.

Turning the adjusting knob A clockwise in the "+" direction increases the compression damping, resulting in a slower shock compression rate.

Turn the adjusting knob A counterclockwise in the "-" direction decreases the compression damping, resulting in a faster shock compression rate.

Rebound Damping

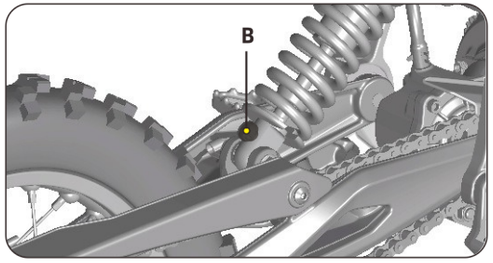

The rebound adjustment knob B is located at the bottom side of the rear shock absorber

Turning the adjusting knob B clockwise in the "+" direction increases the rebound damping, resulting in a slower rebound speed.

Turn the adjusting knob B counterclockwise in the "-" direction decreases the rebound damping, resulting in a faster rebound speed.

NOTE

The appearance of front fork may vary based on different brands supplied with your Hyper Bee, please refer to the actual product

Rear Shock preload

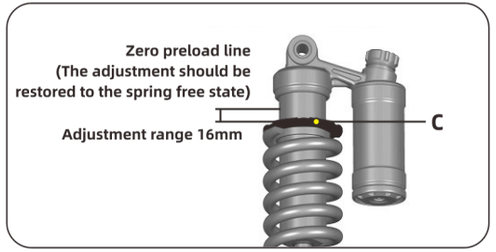

1. Turn the adjusting ring C with the adjusting wrench.

2. Turn the adjusting ring C counterclockwise to decrease the spring preload; turn the adjusting ring C clockwise to increase the spring preload.

NOTE

It is NOT recommended to adjust the preload more than 16mm. Excessive preload will affect the effective travel of the rear shock

The appearance of front fork may vary based on different brands supplied with your Hyper Bee, please refer to the actual product

NOTE

The damping and preload should be adjusted according to the road conditions and the weight of the rider. Avoid to adjusting the damping to the maximum limit value at all time, otherwise the shock absorber may malfunction or even lead to a fatal or serious injury

Battery Pack

Do not charge the battery pack below 0°C, as it may damage the battery pack. You can wait for the battery pack temperature to rise above 0°C before charging again. The highest allowable charging temperature inside the battery pack is 55°C. If the internal temperature of the battery pack exceeds this temperature, charging can only be performed after it cools down to below 55°C. The battery pack can heat up quickly due to intense driving, and even if the ambient temperature is low, the internal temperature of the battery pack may still be above 55°C.

The Hyper Bee electric motorcycle uses a high-performance lithium-ion battery which can be ridden in the ambient temperature range of -20°C(-4°F) to 45°C(113°F), for the best performance it is recommended to ride in the ambient temperature between 10°C(50°F) ~ 30°C(86°F).

Extreme low or high ambient temperatures will affect the battery pack performance and life span. Do not use the battery pack at temperatures beyond the allowable range, and do not charge the battery pack below 0°C(32°F). The charging time of the battery pack from 0 to 100% State of Charge (SoC) is about 3.5 hours in a 25°C(77°F) ambient temperature environment.

When the ambient temperature is too low, the performance of the battery pack will be affected. It is normal that the range will be reduced a little, and the performance of the battery pack will automatically recover after the temperature rises back to an optimal temperature range.

When not in use for a long time, please charge the battery level to between 60 ~ 80% SoC, and check the remaining capacity every month. Charge the battery pack when the battery level is less than 30%, so as to avoid excessive discharge of the battery pack.

It is strictly prohibited to use a pressure washer to clean the battery pack or immerse the battery pack in water over 300mm to clean it. The water crossings where the motorcycle is in water above the front and rear axle centerline should be avoided. Water ingress into the battery pack creates a risk of an internal short circuit and permanent failure of the battery pack. If you did ride crossing water, the condition of the motorcycle should be rechecked immediately, and it is strictly prohibited to ride the electric motorcycle in seawater or other corrosive liquids. If you suspect water ingresses into the battery pack or damage to the battery pack , it is strictly forbidden to charge or use the battery pack. It may cause fire, and/or explosion of the battery pack.

The battery pack has been designed to be water resistant and its' high voltage components are sealed inside of the casing. A damaged external structure will reduce the water-resistant performance of the battery pack. If the water-resistant structure is damaged, please contact your Surron Dealer or the Surron after-sales service. It is strictly forbidden for users to disassemble the battery pack to avoid the risk of personal injury, fire, or explosion.

Power Management

Cold weather condition

Riding the Hyper Bee electric motorcycle in cold weather will not have a permanent effect on its battery pack; however, the rider may notice a reduction in range and power due to the effect that low temperatures have on the amount of energy that can be released by the battery pack. Therefore, the Hyper Bee electric motorcycle may temporarily reduce its range by about 30% when used in an environment below 0°C(32°F) compared to an environment at 25°C(77°F).In extremely cold weather, the Hyper Bee electric motorcycle may also temporarily reduce power and fail to reach its maximum speed.

Storage temperatures below -20°C(-4°F) may cause permanent degradation of the battery pack performance. Keeping your battery pack in an environment within the long-term storage guidelines (refer to "Long-term storage of vehicles" on page 10.15) will ensure that your battery pack is not permanently damaged during winter storage.

Hot Weather Condition

Using the Hyper Bee electric motorcycle in high temperatures will not cause any noticeable performance changes. However, when the battery pack temperature is above 70°C(158°F) (based on the battery temperature sensor) , the battery management system will shut down the battery pack output to avoid potential damage to the battery pack.

In the case of a battery pack temperature above 50°C(122°F), the charger will reduce the charging current to protect the battery pack, which may increase the charging time. When the battery pack temperature exceeds 55°C(131°F), the battery management system will no longer allow charging.

_____CAUTION_____

Please do not place the Hyper Bee electric motorcycle or its battery pack in direct sunlight with an ambient temperature above 41°C(105.8°F) for prolonged periods, as this may accelerate the degradation of battery performance

1. The battery pack is a lithium system, which does not require maintenance but needs to be charged irregularly. When not in use for a long time, please charge the battery SoC level to between 60 ~ 80%, and check the remaining capacity every month. Charge the battery pack when the battery level is less than 30%, so as to avoid excessive discharge of the battery pack
2. The battery pack should be kept away from overheating environments. Do not store it in high-temperature conditions or expose it to

direct sunlight when not used for a long time, store the battery pack at an ambient temperature of 10°C(50°F) ~ 30°C(86°F)

Battery Pack

Before charging, please check whether the grid voltage and outlet amperage are within the range supported by the charger. (AC 85 ~250V/200~240V)Before charging, please check whether the power load of the AC outlet can meet the charger's power requirements.

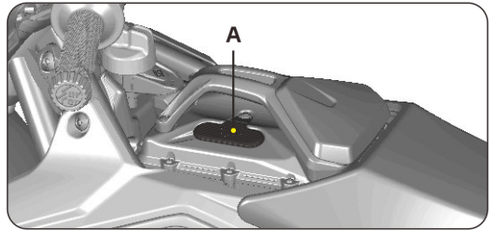

When charging, please connect the charger output plug to the battery pack first, then connect the charger input plug to the AC grid power.

First, remove the dust cap A from the charging port, then align the charger output port with the magnetic charging port on the top cover of the battery to start charging. The charger will turn off automatically when the battery is fully charged. Please disconnect the power supply for the charger first and then disconnect the charging plug connected to the battery.

____CHARGING PRECAUTIONS____

When charging, please put the motorcycle or battery pack in a safe place, beyond the reach of children

Avoid using the battery pack when it has just finished charging. After fully charged, disconnect the charger before use. It is recommended to let the battery stand for 10 minutes or more before use

It is prohibited to cover the charger during charging. The charger is for indoor use, please use it in a dry and well-ventilated environment

Please replace the cover to the charging port of the battery pack after charging is completed to prevent dirt contamination

____________WARNING____________

Always charge the battery pack in a well-ventilated environment and keep away from any combustibles. Do not charge in rain.

The battery pack can only be charged with the original charger or a charger specified by the manufacturer. The use of unauthorized chargers or accessories may cause damage, failure of the battery pack or even personal injury, or fire.

Do not charge the battery pack below 0°C (32°F), otherwise it will damage the battery pack. The battery pack can be charged again after its temperature rises back above 0°C (32°F). The maximum allowable charging temperature of the battery pack is less than 55°C (131°F). If the temperature of the battery pack exceeds this value, it can only be charged after being allowed to cool below 55°C (131°F). The battery pack will discharge and heat up rapidly after heavy riding. Even if the ambient temperature is low, the battery pack internal temperature may still be high.

Never "heat up" your battery by put your battery close to heater or open fire, never "force cool "your battery by immersion in water, ice, or placing in a freezer as the temperature mismatches between the outside and inside of the battery can cause excessive mechanical stresses or other serious accident. The battery pack may not be able to be charged immediately after high power output or high temperature operation. Charging should begin after the battery pack has cooled for 30 minutes or more.

WARNING

The battery pack may not be able to charge immediately after high power output or after working under high temperature conditions. The battery pack should be cooled for 30 minutes or longer before charging begins. Because the battery pack management policy prohibits charging when the internal temperature is high, otherwise it will shorten the life of the battery pack

SERIOUS WARNING

If you notice any of the following situations, please immediately stop charging and disconnect the power. Do not use the motorcycle and contact Surron service or local Authorized Surron Dealer immediately:

The battery pack is visibly damaged

There is an unusual smell during charging.

The battery pack or charger temperature is excessively high

The battery pack shows no signs of being fully charged even after a long time.

If the battery pack catches fire, throw it into water to cool it down to avoid further damage

Power System

The power system of Hyper Bee electric motorcycle mainly consists of a battery, motor and a controller

NOTE

It is strictly prohibited for users to disassemble the motor without permission, otherwise it may cause the position sensor malfunction or damage the corresponding seal which can lead to motor failure

It is strictly prohibited to disassemble the controller and its cables without permission, it may cause serious electric shocks and burns. The controller is a high-voltage precision electronic component with cables carrying large current levels. Incorrect wiring connection and wrong screw torques may cause damage to the controller or power system

The power system of the Hyper Bee electric motorcycle must be repaired or replaced by a trained professional technician authorized by Surron. Users are not allowed to disassemble or modify the power system of the Hyper Bee electric motorcycle

Power cables carry high current levels during operation, make sure the cable connections are correctly torqued Ensure the cable insulation isn't damaged. Disassembling power system components and cables is strictly prohibited

The power system operates at 48V. During the use, repair, and maintenance of the motorcycle, ensure that its insulation performance is not compromised

Maintenance

Maintenance Item

The proper replacement fluids are listed in the table below.

Parts	Type	Volume
Brake Fluid	DOT4	
Reduction gearbox fluid	10W-40 SN or above	50ml

Maintenance Records

Please follow the Periodic Maintenance Table on page 10.2. After each scheduled service or maintenance is performed, please record all the required information in the Maintenance Record of this manual.

Scheduled Maintenance

The Hyper Bee electric motorcycle must be maintained as scheduled to ensure safe and reliable operation. The required maintenance schedule specifies how often you should have your electric motorcycle serviced and which items need attention. If you do not feel you have the skills and equipment necessary to perform the tasks or need assistance, please contact your nearby Authorized Surron Dealer to maintain your motorcycle. The warranty will be void if damage, malfunctions, or performance problems are caused by improper maintenance or repair of the electric motorcycle.

The service intervals in this Periodic Maintenance Table are based on riding conditions on unpaved surfaces. If you often ride in wet or dusty areas, some items will need more frequent service. Please consult your local Authorized Surron Dealer for recommendations applicable to your individual use. It is recommended that you maintain your Hyper Bee electric motorcycle at least once every 6 months regardless of the distance ridden.

CAUTION

It is recommended to check the tightening torque of all the screw and bolts before every track or trail ride

Maintenance Schedule

Regular maintenance must be carried out according to this table to keep your Hyper Bee electric motorcycle in optimal operating condition. The initial maintenance is crucial and must not be neglected. Where time and mileage are both listed, follow the interval that appears first.

Periodic Maintenance Schedule

Regular maintenance must be carried out according to the schedule below to keep your electric motorcycle in optimal operating condition. Initial maintenance is crucial and must not be neglected. Where both time and mileage are listed, follow the interval that occurs first.

Electric Motorcycle Periodic Maintenance Table

Check Items	1000km/3 month	2000km/6 month	4000km/9 month	6000km/12 month	10,000km/18 month	14,000km/24 month
Tire	● 🔧	● 🔧	● 🔧	● 🔧	● 🔧	● 🔧
Wheel Spokes	●	●	●	●	●	●
Break Pads	● 🔧 🔄	● 🔧 🔄	● 🔧 🔄	● 🔧 🔄	● 🔧 🔄	● 🔧 🔄
Brake Hydrolic Sytem	● 🔧	● 🔧	● 🔧	● 🔧	● 🔧	● 🔧
Primary Belt (Light Bee/ Ultra Bee)	● 🔧	● 🔧 🔄	● 🔧 🔄	● 🔧 🔄	● 🔧 🔄	● 🔧 🔄
Pulley	● 🔧	● 🔧	● 🔧 🔄	● 🔧	● 🔧 🔄	● 🔧 🔄
Chain	● 🔧	● 🔧	● 🔧 🔄	● 🔧	● 🔧 🔄	● 🔧
Swing arm Protection Block	● 🔧	● 🔧	● 🔧 🔄	● 🔧	● 🔧 🔄	● 🔧 🔄
Sprockets	● 🔧	● 🔧	● 🔧	● 🔧 🔄	● 🔧 🔄	● 🔧 🔄
Shocks	● 🔧	● 🔧	● 🔧	● 🔧	● 🔧	● 🔧
Bearings	●	●	● 🔧 🔄	●	● 🔧 🔄	● 🔧 🔄
Lights	●	●	●	●	●	●
Error Code (Turn on)	●	●	●	●	●	●
Breaking	●	●	●	●	●	●
Gear Box (Hyper Bee Only)	● 🔧	● 🔧	● 🔧	● 🔧	● 🔧	● 🔧
Battery Charger Level	● 🔧	● 🔧	● 🔧	● 🔧	● 🔧	● 🔧
Electrical Wiring/Plugs/ Screwing Terminal/Sensors	●	●	●	●	●	●
Screws Torque	●	●	●	●	●	●
Any Abnormal Condition	●	●	●	●	●	●

● Check 🔄 Replace 🔧 Maintain

-FETCH LIGHT-飞起来-

-FETCH LIGHT-飞起来-

Torque Management

Check regularly and tighten the following fasteners on the Hyper Bee electric motorcycle according to the specified torque.

CAUTION

Steering tube nut adjustment method:

1. Place the motorcycle on a repair stand so that the front wheels are off the ground
2. Loosen the steering tube lock bolt and the front fork lock bolt on the upper triple clamp
3. Tighten the steering tube nut to 20N.m and then loosen it by 1/4 turn
4. Tighten the steering tube lock bolt and the front fork lock bolt on the upper triple clamp
5. Check whether the handlebar turns smoothly and repeat the above operation if necessary

Maintenance

Please refer to page 10.5 Torque management.

-FETCH LIGHT-飞起来-

Maintenance

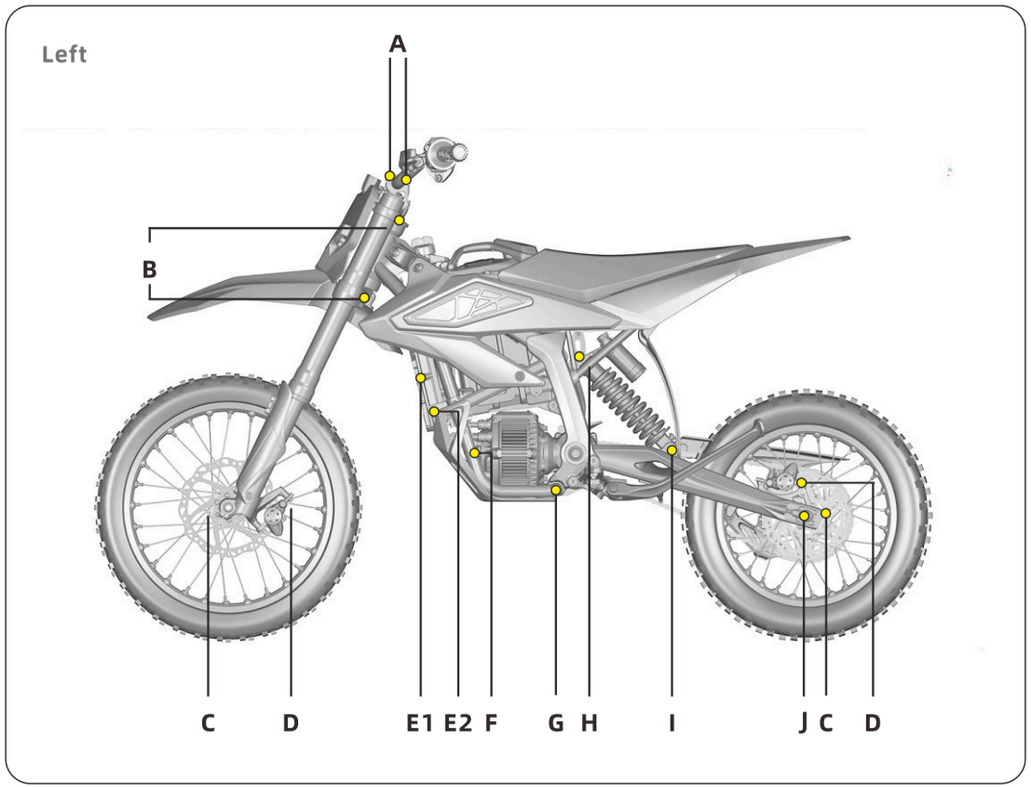

Loca Tion	Item	Torque	Specification	Note
A	Handlebar clamp arch and handlebar support installation screws	11-13N.m	Torx hexagon flange screw -M6*25	only for handlebar support
B	Steering tube locking bolts	45-50N.m	Hexagon socket pan head cap bolt-M16*1*17.5	
C	Front & rear brake disc installation screws	8-10N.m	Hexagon socket pan head cap screw-M5*10	*
D	Front & rear caliper installation screws	10-12N.m	Hexagon socket-M6*20	*
E1	Install bolts above the controller	10-12N.m	Internal plum pan head screw-M6*12	*
E2	Install bolts under the controller	10-12N.m	Hex socket flange screw with internal plum groove-M6*12	*
F	Motor reduction gearbox front installation bolts	25-28N.m	Hexagon flange bolt--M8*20	
G	Motor reduction gearbox rear installation screws	30-35N.m	Hexagon socket -M8*56	
H	Rear shock absorber installation screws top	30-35N.m	Hexagon socket -M8*42	
I	Rear shock absorber installation screws bottom	30-35N.m	Hexagon socket -M8*50	
J	Rear wheel axle locking nuts	55-60N.m	Hexagon flange locking nut -M12*1.25	

Maintenance

Right

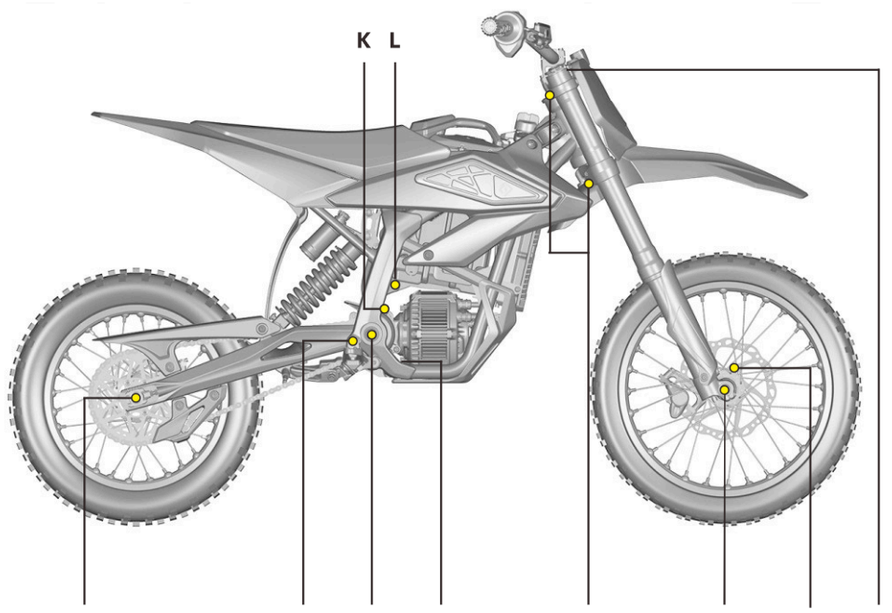

Loca Tion	Item	Torque	Specification	Note
K	Front sprocket installation bolts	10-12N.m	Hexagon bolt-M6*16	
L	Battery holder bar installation screws	25-28N.m	Hexagon socket -M8*25	
M	Rear sprocket installation screws	10-12N.m	Torx hexagon flange screw -M6*16	*
N	Footpeg installation screws	25-28N.m	Hexagon socket -M8*20	*
O	Middle shaft bolts	45-50N.m	Torx pan head bolt -M10*1.25*30	*
P	Frame support bracket installation screws	25-28N.m	Hexagon socket -M8*20	*
Q	Front fork locking screws	8-10N.m	Hexagon socket -M5*18	
R	Front wheel axle locking bolts	20-30N.m	Torx pan head bolt-M16*1.5*12	
S	Front wheel axle locking screws	8-10N.m	Hexagon socket -M5*18	
T	Steering tube adjustment nuts	/	T-shaft bolt outer thread -M24*1*8	Please refer to page 10.3

Note: Items marked with "*" in the manual should use Kraft K-0609 (or similar products)

Battery Pack

CAUTION

Battery packs are lithium-ion systems that do not require maintenance but need to be charged from time to time. When not in use for a long time, please charge the battery pack State of Charge (SoC) level to about 60% ~ 80% for storage. You will need to check the remaining battery SoC level every month. Charge the battery pack when the battery level is less than 30%, so as to avoid excessive discharge of the battery pack

2. The battery pack should be kept away from extreme low and high temperature environments. Do not store it under direct sunlight. When not used for a long time, please store the battery pack at an ambient temperature of 10℃~30℃ (50℉ ~86℉).3. Disposing of the battery packs is subject to local laws and should only be recycled by locally approved professional recycling companies. **DO NOT DISCARD ON YOUR OWN**

Brake System

This section describes how to maintain the brake system of the Hyper Bee electric motorcycle, which covers the brake pads (front and rear brake pads are universal), and brake fluid type and levels.

Brake Fluid Level Check

Brake Fluid Reservoir

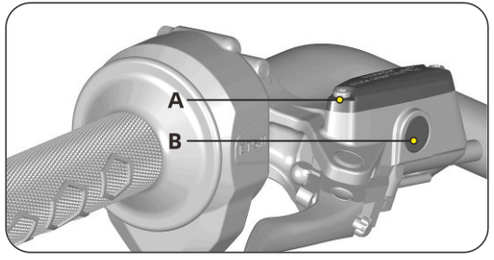

The brake fluid level can be observed through inspection window B. If the fluid level is lower than one-third of inspection window B, the brake fluid must be added. Before opening the brake fluid reservoir, please clean all dust and dirt on the reservoir lid A to avoid contaminating the brake fluid.

A low fluid level may indicate worn brake pads or leak in the hydraulic system. Check whether the brake pads are worn and whether the hydraulic system is leaking. Only use the new DOT4 brake fluid in a sealed container.

The steps of adding brake fluid are as follows:

1. Unscrew the two screws on the lid of the brake fluid reservoir, remove the brake fluid reservoir lid and the reservoir gasket.

2. Add new DOT4 brake fluid.

3. Check the lid seal to make sure that there is no wear or damage, and the position is correct when installed back.

4. Install the screws for the reservoir cap (torque: 2N.m)

CAUTION

Do not splash the brake fluid on the painted surface, as it may damage the paint

Spilling brake fluid on plastic parts can cause corrosiondamage to the plastic part

Before removing the reservoir lid, make sure to put an oil absorbent towel under the reservoir

WARNING

Before checking the fluid level, the Hyper Bee electric motorcycle should be in a flat and upright state and the handlebars should be in the center to ensure that the reservoir is in a horizontal proper position

When adding new brake fluid, if the brake fluid overflows, it should be removed immediately to prevent contamination of other parts

Brake Disc Inspection

The thickness of the brake discs should be checked regularly. The minimum thickness is 1.8mm.Brake Pads Inspection

The brake pads must be checked at the specified intervals in the Periodic Maintenance Table, please refer to page 10.2. Check the remaining amount of brake pad visually from the side of the brake caliper.

Maintenance

If the thickness of the front or rear brake pads is less than 2.5 mm, please replace the brake pads. If the brake pad is damaged, please replace both brake pads immediately regardless of the degree of damage.

Brake Pad Replacement

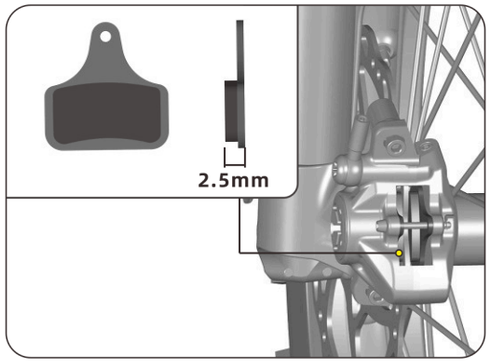

It is recommended to check and run-in after replacing new front and rear brake pads A or brake discs to ensure that the brake discs and brake pads seat correctly. Proper run-in can improve the braking feel and reduce or eliminate braking noise.

_____WARNING_____

When using a new braking system or new brake pads, the initial braking force may be small. Please try to run- in the brake pads and brake discs at low speed to ensure that the brake system can provide normal braking force

Suspension System

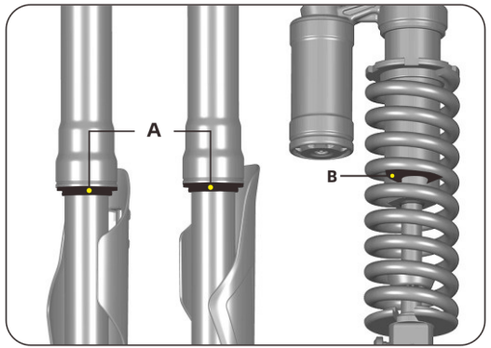

1. It is recommended to clean the surface of the shock absorber immediately after each ride, especially if there is any mud and sand attached to the surface of the main tube. When cleaning with a high-pressure water gun, it is strictly prohibited to flush upwards facing the dust-proof seal A and B, as this will flush mud and sand into the seal and cause damage to the seal and leakage of the damping oil.

2. Only use neutral detergent with soft cotton to clean. Corrosive solvents may cause damage to the dust proof oil seals.

3. It is recommended to apply a layer of lubricating grease on the surface of the main tube after cleaning to make the surface of the main tube fully lubricated.

_____WARNING_____

The shock absorber contains high-pressure gas or liquid

Do not try to modify or disassemble the shock absorber

Avoid impact， high temperature or open flame applied on the gas cylinder

After riding the motorcycle, the shock absorber and the gas cylinder may be in a high temperature statehot. Do not touch directly to avoid burns

_____WARNING_____

Improper operation to the shock absorber may cause damage, explosion and serious personal injury

For maintenance, please refer to the Periodic Maintenance Table on page 10.2. For adjustment, please refer to page 7.5 and 7.6

Wheels and Tires

Check the wheels and tires for any of the following:

Deformed or cracked rim;

Impact marks on the rim; Loose or deformed spokes;

Cuts, cracks, penetration or missing tread blocks in the tread or sidewall area;

Tire bulge;

Uneven tire thread wear;

Uneven height of tire bead to the rim.

If you find any of the conditions above, please replace the wheel or tire immediately.

Tire Pressure

Type	Front Wheel	Rear Wheel
Off-Road Tires	225kPa	225kPa

Note: The recommended tire pressure range is 100 ~ 150 kPa for dirt track or trail riding.

WARNING

Incorrect tire pressure is a common cause of tire failure. Long-term incorrect tire pressure may lead to tire damage, thread separation or even loss control of the motorcycle, resulting in serious personal injury

Before each ride, check the tire pressure and adjust it to an appropriate pressure level. When the tire is cold, use an accurate pressure gauge to check the tire pressure

When the tire pressure is too low, the rolling resistance of the outer tire increases, and the inner tube may also shift position and fail

Chain

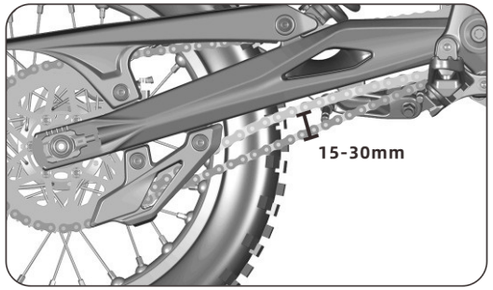

Please refer to the Periodic Maintenance Table on page 10.2 for the inspection and maintenance of the chain.

1. Keep the chain and sprockets clean.

2. Check the chain wear, tightness and lubrication.

(1) After removing the key from the key switch and turning off the main power switch, prop up the body of the motorcycle with a lift stand so that the rear wheel is suspended. Move the chain up and down and check whether the slack is within the recommended range: 10-25mm.

(2) When adjusting, first loosen the rear wheel axle nut, and then adjust the left and right adjusting bolts to bring the chain slack within the recommended range.

(3) Use an appropriate amount of chain oil or chain wax to lubricate the chain.

CAUTION

When the chain slack is beyond the recommended range, it will aggravate the wear of the swingarm protection rubber. Please adjust the value to 15-30mm before riding your motorcycle

3. After adjustment, the left and right chain adjuster marks should be symmetric to the marks on the swingarm

Chain Adjustment Procedure

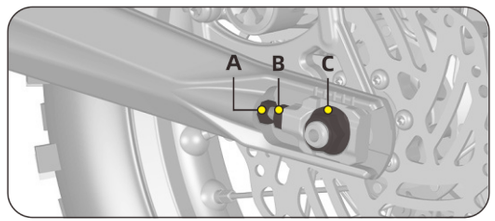

1. After removing the key from the key switch and turning off the main power switch, prop up the body of the motorcycle with a lift stand so that the rear wheel is suspended.

2. Loosen the rear wheel axle nut A.

3. Loosen the locknut B of the left and right adjusting bolts C.

4. Adjust the left and right adjusting bolts B equally until the chain is adjusted within the specified range.

5. Tighten the rear axle nut A.

6. Tighten the left and right locknuts C to fix the position of the adjusting bolt B.

7. Test ride the motorcycle.8. After the test ride, please recheck whether the chain is adjusted correctly, and re-adjust if necessary.

CAUTION

When adjusting the tension of the chain, adjust the adjusting bolts on both sides equally

Light Replacement

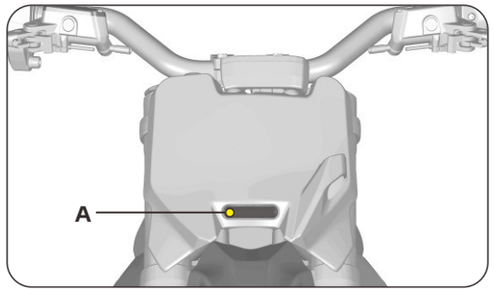

When the headlight A is damaged， please contact the Authorized Surron Dealer for a complete replacement.

Motorcycle Cleaning

1. Use a sponge or clean soft cloth, neutral detergent and water to gently clean the motorcycle.

2. Be extremely careful when cleaning the dashboard, it is easy to get scratched.

3. After cleaning, rinse the motorcycle thoroughly with water to remove all detergent residues.

4. Dry the motorcycle with a soft dry towel.

5. After cleaning, please check the motorcycle carefully for anomalies.

After cleaning the motorcycle, please maintain the chain and other parts that need to be lubricated. Please let all electrical components completely dry before operation. If the Hyper Bee electric motorcycle is to be ridden immediately after cleaning, use the brakes several times at a safe and low speed to remove the water or other objects on the brake pads.

CAUTION

Improper cleaning can damage motorcycle parts. Do not use a pressure washerhigh-pressure water gun to flush bearings, seals, electrical components and plugs. In order to extend the service life of the Hyper Bee electric motorcycle, it should be cleaned and maintained regularly, and it is recommended to wipe it dry as soon as possible after cleaning

Do not use any harsh chemical products on plastic parts. Avoid cloths or sponges that have been in contact with strong corrosive detergents, solvents, thinners, fuels (gasoline), rust removers or inhibitors, brake fluid, antifreeze, or electrolytes

Maintenance

WARNING

Please make sure the dust cap is well placed during the cleaning process to avoid exposing the magnetic connector to the air or water, to prevent damage to the vehicle's electrical and power systems!

WARNING

After cleaning and before starting to ride, make sure the brakes system functions properly

Wheel and Tire Cleaning

Avoid using strong acid wheel cleaners. If you use this type of product to clean stubborn dirt, please rinse quickly and dry it immediately to prevent damage.

CAUTION

Tires only need to be cleaned. Any tire maintenance products may reduce the friction between the tire and the ground, and even lead to premature aging of the tire

Long-term Storage

For motorcycle that are not used for a long time (more than 30 days), it is recommended to maintain the battery level to about 60% to 80% and turn off the main power switch of Hyper Bee electric motorcycle.

The battery pack also discharges slowly when stored. Check the level of the battery pack at least once every month. If the battery Soc level drops below 30%, then it should be recharged to 60% to 80%. When you are ready to use the Hyper Bee electric motorcycle again, please fully charge the battery pack to ensure it is restored to its best condition.

In order to extend the service life of the power system, the Hyper Bee electric motorcycle should be stored in a cool and ventilated place. Storing the Hyper Bee electric motorcycle in a hot or humid place will shorten the life span of the battery pack and electrical system. For more information about batteries and electrical systems,

-FETCH LIGHT-飞起来-

please refer to page 8.1.

CAUTION

Do not store the Hyper Bee electric motorcycle with battery level lower than 30%. Discharging the battery pack below 30% for a long period of time may reduce the battery life or even damage the battery pack. Battery pack damage due to over-discharge or long-term very low battery level is not covered by the warranty

WARNING

Only authorized professional technicians are qualified to provide maintenance services for the battery pack. Please be aware that unauthorized handling of the internal components of the battery pack is very dangerous. Do not disassemble the battery pack!

Hyper Bee Electric Motorcycle Official Parts

Hyper Bee electric motorcycles require the use of parts and accessories specified by Surron. You can obtain original spare parts for maintenance of your Hyper Bee electric motorcycle only from your Authorized Surron Dealer.

Fuse BOX

The motorcycle electrical system has an overcurrent protection device. The fuse is a one-time protection device, which will blow to protect the circuit when it is overloaded. When replacing the fuse, use the same specification fuse.

CAUTION

If the fuse is repeatedly blown, please contact your Authorized Surron Dealer

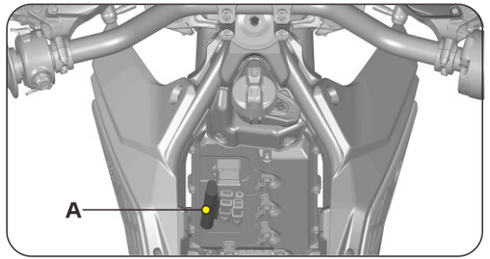

Fuse box A is located between the battery front plate and the controller. You need to remove the battery front plate to spot it.

The fuse box has a protective cap, which must be opened first to access the fuse. To open the cap, press down firmly on the latch and open the cap.

Replacing the fuse:

1. Pinch the fuse box cap and open the cap to the right of the fuse box.

2. Replace the defective fuse with the same specification model.

CAUTION

The fuse box contains a spare fuse

Motor Reduction Gearbox

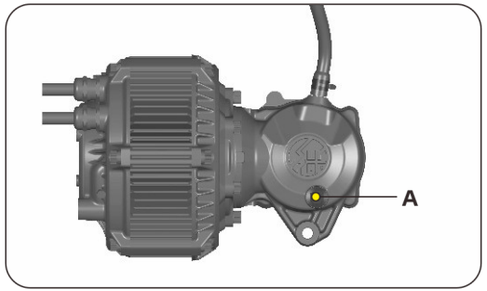

Reduction Gearbox oil replace

1.Place the Hyper Bee electric motorcycle on the lift stand when the motor reduction gearbox is in cold condition, make sure the key switch is turned OFF. Remove drain bolt A to drain the gearbox oil from the drain port until it drips discontinuously.

2.Tilt the Hyper Bee electric motorcycle to the right side, refill 50ml of new gearbox oil in the oil drain port and tighten the oil drain port screw, the recommended torque is 20~25N.m.

Hyper Bee Motorcycle Electrical Schematic Diagram

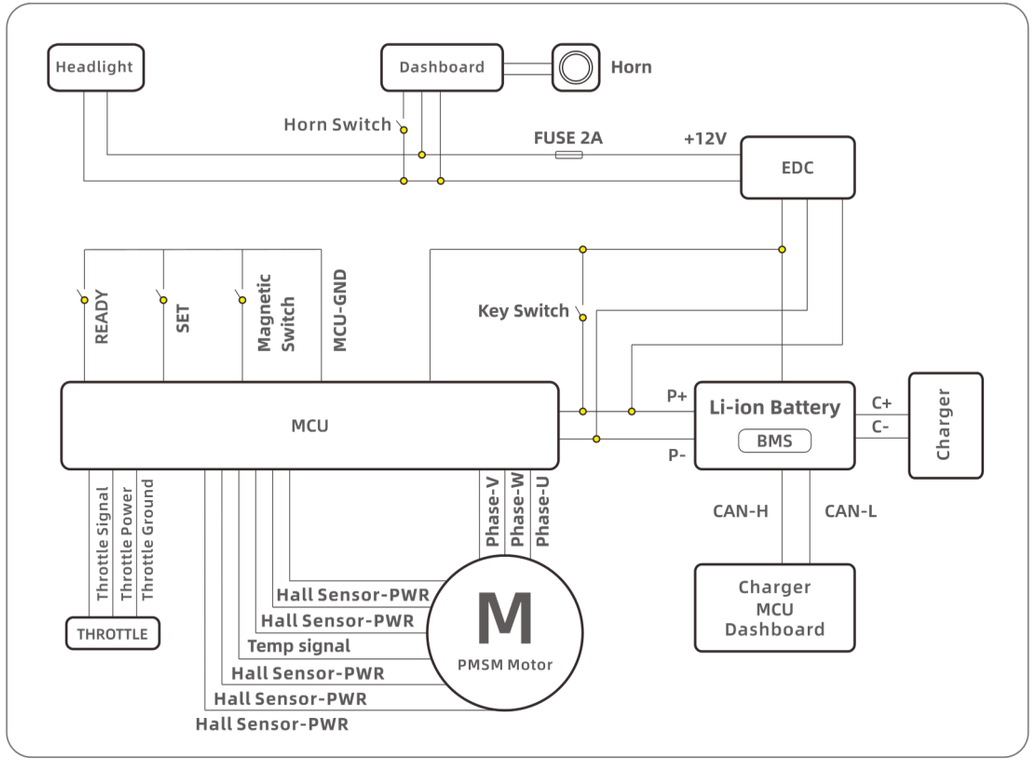

Hyper Bee Electric Motorcycle Troubleshooting

All Hyper Bee electric motorcycles are carefully inspected before delivery by your Authorized Surron Dealer. Even though your Hyper Bee electric motorcycle has been carefully inspected, occasional technical problems might occur. The following information provides guidelines to help you identify problems and do basic maintenance should YOU determine you have the necessary skills. If you are unable to solve the problem by yourself, please contact your Authorized Surron Dealer for assistance.

Safety Interlock

When the battery pack is connected to the Hyper Bee electric motorcycle, if the battery management system detects a serious internal failure, one or both of the following two measures will be taken to prevent battery pack damage:

1. Riding prohibited. If the battery level is 0, or if the battery management system detects some serious internal faults, the motorcycle will be prohibited from use until the problem is solved.

2. Charging prohibited. If the battery management system detects some serious internal faults, it will prevent charging, until the problem is solved.

Precautions for Hyper Bee Electric Motorcycle

Your Hyper Bee electric motorcycle has several high voltage components, please take proper precautions when using it. The high voltage components are dangerous and can result in electric shocks, burns and even serious personal injury.

For safety purposes, always follow the instructions on the label attached to the motorcycle parts and do not touch or attempt to remove or replace any high voltage parts, cables (marked by the orange outer tube) or connectors. In the event of an accident, do not touch any high voltage terminals or components connected to the cables. In case of fire in the electric motorcycle, ensure your personal safety first and then use a Class D rated fire extinguisher to put out the fire. When the flame is out, use large quantities of water or a water-based fire extinguisher to cool it down.

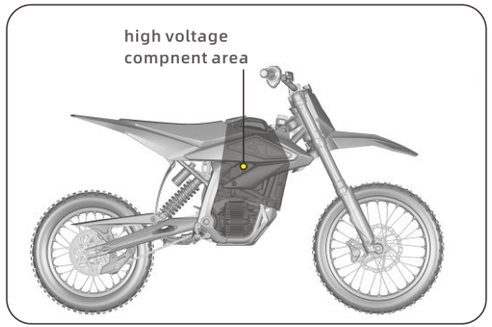

_____WARNING_____

Please make sure the dust cap is well placed during the cleaning process to avoid exposing the magnetic connector to the air or water, to prevent damage to the vehicle's electrical and power systems!

_____WARNING_____

After cleaning and before starting to ride, make sure the brakes system functions properly

System Warning Message

When a fault is detected, the fault indicator A on the top of the dashboard will light up, and the corresponding warning code will be displayed in the B area on the Dashboard LCD screen.

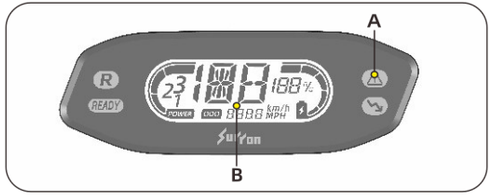

Please refer to the table starting on the next page for possible causes and solutions.

_____CAUTION_____

When vehicle had issue, the warning indicator on the dashboard stays on, and when the vehicle speed is 0, the LCD screen will display the corresponding error code

WARNING CODE CHART

WARNING CODE	DESCRIPTION	SOLUTION
ER-00	Dashboard data communication fault	Check dashboard wire connection
ER-03	Over discharge protection (level 2)	Contact manufacturer or authorized Surron dealer
ER-04	REGEN overcurrent protection (level 2)	Lower REGEN setting
ER-08	Battery discharge MOS over temperature protection (level 2)	Stop using the bike and contact manufacturer or Authorized Surron Dealer
ER-10	Battery charge MOS over temperature protection (level 2)	Stop charging and contact manufacturer or Authorized Surron Dealer
ER-11	Startup self-diagnostic over temperature protection (level 1)	Turn OFF the key switch and back to ON again
ER-13	Battery cell temperature unbalance protection (level 2)	Stop using the bike and contact manufacturer or Authorized Surron Dealer
ER-17	Battery cell voltage unbalance protection (level 2)	Contact manufacturer or Authorized Surron Dealer
ER-19	Battery cell low voltage protection (level 3)	Charging the battery pack

ER-22	Discharging over current protection (level 3)	Stop using the bike and contact manufacturer or Authorized Surron Dealer
ER-24	Battery cell discharge low temperature protection (level 3)	Stop using the bike and wait until the temperature back to working condition
ER-25	Battery cell discharge over temperature protection (level 3)	Stop using the bike and wait until the temperature back to working condition
ER-30	BMS protection board 1 error	Contact manufacturer or Authorized Surron Dealer
ER-31	BMS protection board 2 error	Contact manufacturer or Authorized Surron Dealer
ER-35	Charger Malfunction	Contact manufacturer or Authorized Surron Dealer
ER-37	Battery current sensor error	Contact manufacturer or Authorized Surron Dealer
ER-40	Battery temperature sensor error	Contact manufacturer or Authorized Surron Dealer
ER-41	Startup self-diagnostic temperature sensor error	Contact manufacturer or Authorized Surron Dealer
ER-43	Battery discharge MOS error	Contact manufacturer or Authorized Surron Dealer

ER-44	Battery charge MOS error	Contact manufacturer or Authorized Surron Dealer
ER-45	Battery discharge MOS over temperature protection	Stop using the motorcycle and wait until the battery temperature back to working condition or contact manufacturer or Authorized Surron Dealer
ER-50	Battery discharge connector over temperature warning	Stop using the motorcycle and wait until the discharge connector temperature back to working condition, check the contact area of the connector
ER-51	Battery discharge connector over temperature protection（battery protection triggered）	Stop using the motorcycle and wait until the discharge connector temperature back to working condition, contact manufacturer or Authorized Surron Dealer
ER-52	Battery discharge connector temperature sensor error	Stop using the motorcycle and wait until the discharge connector temperature back to working condition, check the contact area of the connector
ER-100	MCU MOS error	Contact manufacturer or Authorized Surron Dealer
ER-101	MCU over current protection	Bike enters Low Power Mode
ER-104	Motor position sensor error	Contact manufacturer or Authorized Surron Dealer
ER-105	Motor locked rotor error	Check if motor is in locked rotor condition
ER-106	MCU current sensor error	Contact manufacturer or Authorized Surron Dealer

ER-107	MCU over temperature protection	Stop using the bike and wait until the MCU temperature back to working condition
ER-108	Motor over temperature protection	Stop using the bike and wait until the Motor temperature back to working condition
ER-109	Main power cable instant Low voltage protection	Check MCU main power cable
ER-110	Main power cable Low voltage protection (level 3)	Charging the battery pack
ER-111	Main power cable high voltage protection	Disable REGEN function
ER-113	Battery cell over/low temperature protection (level 3)	Stop using the bike and wait until the temperature back to working condition
ER-114	Throttle signal protection	Check if throttle cable is short circuited or unable back to idle position
ER-115	Throttle ground protection	Check if throttle cable is short circuited, cable damaged or broken
	Hyper Bee Remote emergency power off protection	Check the condition of the Hyper Bee Remote button or turn off the key switch and back to ON again
AL-117	Magnetic switch protection	Check magnetic switch and magnetic switch circuit

AL-118	Tilt switch protection	Re-ready the bike or turn off the tilt switch function in setting mode
AL-119	Main power cable Low power protection	Check bike communication cables, charge the battery pack
AL-120	Battery SOC low or high temperature power limitation (level 2)	Stop using the motorcycle and wait until the battery temperature back to working condition and charge the battery pack
AL-121	Battery cell discharge low or high temperature power limitation (level 2)	Stop using the motorcycle and wait until the battery temperature back to working condition
AL-122	Main power cable Low voltage power limitation (level 1)	Charge the battery pack
AL-123	Battery SOC low or high temperature power limitation (level 1)	Stop using the motorcycle and wait until the battery temperature back to working condition and charge the battery pack
AL-124	Battery cell discharge low or high temperature power limitation (level 1)	Stop using the motorcycle and wait until the battery temperature back to working condition
AL-125	MCU over temperature power limitation (level 1)	Stop using the motorcycle and wait until the MCU temperature back to working condition
AL-126	Motor over temperature power limitation (level 1)	Stop using the motorcycle and wait until the Motor temperature back to working condition
ER-127	Motor temperature sensor error	Contact manufacturer or Authorized Surron Dealer

AL-128	REGEN disabled	Check battery temperature and battery voltage
ER-129	CAN communication error	Check all wire and cables
ER-130	Speed sensor error	Check if front and rear wheel speed sensor is well connected
ER-131	Main power cable instant High voltage protection	Disable REGEN function
ER-133	Key switch power loose protection	Check key switch and MCU cable connection
ER-134	MCU firmware malfunction protection	Turn OFF the key switch and back to ON again
ER-135	Battery cell high voltage difference protection	Contact manufacturer or Authorized Surron Dealer
ER-136	High MOS discharging temperature MCU protection	Stop using the bike and wait until the temperature back to working condition
ER-137	Battery cell low voltage protection	Battery cell low voltage protection
ER-138	MCU Regeneration Protection	Turn OFF the key switch and back to ON again

n0	Controller transport mode	Activating after binding SURRON APP
ER-140	BMS temperature variation led to a shutdown	Contact manufacturer or Authorized Surron Dealer
ER-144	BMS discharging over current power limitation	Low power mode (level 1)
ER-145	Battery cell high voltage difference power limitation	Low power mode (level 2)
ER-146	High MOS discharging temperature power limitation	Stop using the bike and wait until the temperature back to working condition
AL-147	Battery cell low voltage power limitation	Charging the battery pack and contact manufacturer or Authorized Surron Dealer
AL-148	Battery SOC low power limitation	Charging the battery pack and contact manufacturer or Authorized Surron Dealer
AL-149	MCU over temperature power limitation (level 2)	Stop using the motorcycle and wait until the MCU temperature back to working condition
AL-150	Motor over temperature power limitation (level 2)	Stop using the motorcycle and wait until the Motor temperature back to working condition
ER-151	Battery discharge connector over temperature power limitation	Stop using the motorcycle and wait until the discharge connector temperature back to working condition, check the contact area of the connector

ER-152	Battery discharge connector over temperature protection	Stop using the motorcycle and wait until the discharge connector temperature back to working condition, check the contact area of the connector
ER-153	Gyroscope malfunction	Restart ignition switch/Contact manufacturer or authorized dealer
AL-154	The motorcycle status does not fulfill the requirements for SURRON Anti-Wheelie Control System	Reset magnetic power/Restart ignition switch
AL-156	Disable negative torque when speed is below -3 km/h.	Automatically resumes when exceeding 3 km/h

When vehicle had issue, the warning indicator on the dashboard stays on, and when the vehicle speed is 0, the LCD screen will display the corresponding error code.

Troubleshooting

Faults	Possible cause	Troubleshooting
Bike does not power on	Battery not plug into correct position	Check battery plug
	Battery SOC too low	Charging the battery
	Battery enters temperature protection	Wait until temperature back to working condition
	Main harness fuse melted	Check all wire and cables and replace fuse
	Key switch not properly engaged	Recheck key switch or replace new key switch
	DC converter error	Replace DC converter
	Battery malfunction	Contact manufacturer or Authorized Surron Dealer
Bike powered on but not moving	Tilt sensor triggered but not reset	Switch off the key switch and turn on again after lift up the motorcycle
	Throttle not in idle position when motorcycle powered on	Check throttle position

Troubleshooting

Bike powered on but not moving	Battery low SOC protection	Charging the battery
	Motor temperature protection	Wait until the temperature back to working condition
	MCU temperature protection	Wait until the temperature back to working condition
	Throttle error	Replace throttle
	MCU not plug in position	Check MCU plug connection
	Motor encoder not plug in position	Check motor encoder plug connection
	MCU or motor encoder error	Contact Authorized Surron Dealer repair or replace MCU
Bike powered on but battery SOC not display	Coulombmeter not connect properly	Contact Authorized Surron Dealer repair or replace motor
	Coulombmeter error	Contact manufacturer or Authorized Surron Dealer to repair or replace battery
Charger not working	Battery enters temperature protection	Contact manufacturer or Authorized Surron Dealer to repair or replace battery

Charger not working	charger not plug properly	Check power source and plug again
	Charger malfunction	Replace charger
	Battery malfunction	Contact manufacturer or Authorized Surron Dealer
Riding mode malfunction and power reduced	Low battery SOC	Charge battery
	Battery temperature protection	Wait until the temperature back to working condition
	MCU or motor temperature protection	Wait until the temperature back to working condition
	Riding mode switch error	Replace riding mode switch

Note: we will keep updating all information above, please check latest version on our website.

Troubleshooting

Warranty Information

Surron Electric Motorcycle

Conditions of Warranty

Surron hereby warrants that a new Surron electric motorcycle purchased from an authorised Surron dealer will be free from defects in materials and workmanship for the period of time stated herein, subject to certain limitations stated herein. This warranty applies only if the electric motorcycle has been properly set up and serviced for pre-delivery by an authorised Surron dealer. The warranty applies only if the motorcycle has been operated and maintained in accordance with the owner's manual or other Surron literature that was delivered with the electric motorcycle.

This warranty is void if the DEALER PRE-DELIVERY INSPECTION has not been completed in full and entered into the Surron distributor website within seven days of purchase by the original selling dealer.

Period of Warranty for Surron Motorcycles

For motorcycles used in recreation and farming, but not used in competition:

Duration: 12 months from the date of purchase or 10,000 kilometres, whichever comes first.

12.1

Limitations: This warranty is non-transferable and applies to the original purchaser only.

12.1

Any Surron motorcycle utilised commercially in connection with generating income and/or commercially licensed or tagged (e.g. rental, demonstration, wholesale, etc.) during the warranty period will be covered for 30 days from the date of purchase.
Demonstration motorcycles are Surron electric motorcycles that have been ridden or used by Surron, or a Surron authorised dealership's customers, members of staff, or press media, but have never been registered within the state, province, or country.

The warranty period becomes effective on the date of purchase by the original purchaser and remains in effect only as stated above.

-FETCH LIGHT-飞起来-

-FETCH LIGHT-飞起来-

Parts Covered by the Warranty

Surron warrants to the customer that the motorcycle is defect-free both in terms of material and workmanship from the factory. Due to battery chemistry, there is a normal, expected reduction in the range and capacity that battery packs yield over time and usage.

Depending on use and storage conditions, battery packs will degrade over the duration of this warranty period. Pursuant to this warranty term, Surron will only repair or replace a battery pack that exhibits a nominal storage capacity reduction of greater than 20% of the published nominal capacity, as measured by Surron or an authorised Surron dealer/workshop.

Any part found to be defective during the motorcycle's stated warranty period under proper use and normal operating conditions, subject to the limitations of this warranty policy, will be repaired or replaced free of charge. "Normal operating conditions" require routine care and maintenance of the Surron electric motorcycle and battery pack as described in the owner's manual and maintenance handbook.

Warranty Labour Coverage

Labour to replace parts that are covered by the Surron warranty and found to be defective in material or workmanship is free of charge for the original purchaser. Warranty repairs must be performed only with the authorisation of Surron.

12.2

The cost of parts and labour involved in routine care and maintenance, as well as the replacement of parts due to normal wear and tear, use, or deterioration, is not covered. This includes, but is not limited to, items such as tyres, brake pads and discs, drive belts, drive chains, fork seals, bearings, grips, footpegs, and seats.

12.2

General Exclusions from Warranty

This warranty does not cover any failures resulting from or caused by:

1. Lack of proper maintenance or maintenance contrary to the requirements described in the owner's manual and the New Zealand maintenance handbook.
2. Parts, components, or battery packs damaged by use or operation under abnormal circumstances, or damage due to accident, collision, abuse, neglect, or extreme use, such as competitive racing.
3. Modifications, alterations, or installation of non-genuine Surron parts or non-Surron-authorised power system components, including the motor, gearbox, sensor, electrical wiring, converter, charger, display, battery, and MCU.

-FETCH LIGHT-飞起来-

-FETCH LIGHT-飞起来-

4. Normal wear components, including, but not limited to, the following: tyres, rims, brake components, spokes, drive chain, drive belt, handlebar grips, all bearings, all seals, all transmission gears, suspension valving/seals, all sprockets, footpegs, and seat.
5. Damage, malfunctions, or performance problems caused by the continued operation of the motorcycle after an error code or other warning indicator signals a mechanical or operational problem.
6. Cosmetic concerns that arise as a result of environmental conditions, owner abuse, misuse (such as, but not limited to, using unsuitable cleaning liquids), lack of routine care and maintenance, or improper use.
7. Damage to or malfunction of components and electrical systems due to the owner installing non-genuine Surron parts or replacement parts not approved by Surron.
8. Damage to paint and coatings, or corrosion of metal parts due to external influences such as stone chips or salt.
9. Fading of painted or metal-coated surfaces.
10. Damage, malfunctions, or performance problems caused by fire, collision, accident, or improper storage.
11. Tyres installed on the Surron electric motorcycle (the original equipment tyres are warranted separately by the tyre manufacturer).

12.3

In addition, the Surron warranty applies solely to New Zealand end-user customers who purchased from an authorised dealer. It is not applicable to electric motorcycles or accessories not imported or distributed by Surron, or not authorised by Surron.

12.3

Modifications

The motorcycle may only be equipped with parts that have been purchased from and installed by Surron New Zealand or a Surron authorised dealer. This includes non-genuine parts, but excludes any modifications to the power system, such as the motor, gearbox, sensor, electrical wiring, converter, charger, display, battery, and MCU. The supplier of non-genuine parts provides the installation guide and the corresponding warranty. The Surron warranty does not cover any damage that results from the installation of non-genuine parts.

End-user customers are responsible for keeping records of all modifications.

The installer is responsible for the warranty and associated damage repair resulting from non-genuine parts, which are not covered by the New Zealand nationwide warranty.

Owner Responsibilities

1. The owner is responsible for reading and understanding the owner's manual, the New Zealand periodic maintenance handbook, these warranty terms, and all product warnings before operating their Surron electric motorcycle. The owner is also responsible for maintaining the Surron electric motorcycle in accordance with the schedule printed in the New Zealand periodic maintenance handbook.
2. The owner is responsible for all maintenance costs, including scheduled service intervals. Service work performed by the owner will void the warranty.
3. The owner must perform all recommended and necessary routine care and maintenance, and engage in the proper use of the Surron electric motorcycle as detailed in the owner's manual and the New Zealand periodic maintenance handbook. Failures caused directly by a lack of maintenance or improper maintenance will void the warranty.
4. If warranty repairs are required, they must be performed by an authorised Surron dealership with the correct qualifications. The owner may be asked to provide documentation of proper maintenance, such as maintenance records displaying the date of service and work performed by an authorised dealer, or copies of repair orders and receipts.
5. The original registered owner, as documented on the Surron motorcycle warranty registration form, is responsible for passing on the owner's manual, the New Zealand periodic maintenance handbook, all safety warnings, instructions, and the Limited Warranty if the unit is sold, loaned, or otherwise transferred to another person.
6. If the vehicle owner needs to replace a faulty part, they must contact an authorised Surron dealer or deliver the faulty part to an authorised Surron dealer within ten (10) days of the malfunction occurring. The authorised dealer will then carry out warranty or after-sales maintenance for the faulty part.
7. The owner is responsible for ensuring all recommended and necessary routine care and maintenance are carried out, and for using the Surron motorcycle and battery pack as detailed in the owner's manual and the New Zealand periodic maintenance handbook. This includes obtaining any firmware updates available at each service interval or on a timely basis following notification that a new update is available, which must be completed by an authorised Surron dealer.
8. The owner must learn and obey all national, regional, and local laws governing the operation of motorcycles generally and electric motorcycles specifically. When operating a Surron electric motorcycle, the rider must wear proper safety equipment and clothing at all times, including, but not limited to, a helmet, eye protection, and appropriate boots.
9. Surron does not authorise any company or individual to create liability or warranty obligations on its behalf. Surron, at its sole discretion, will make the final decision regarding any component submitted for warranty evaluation. All parts and components replaced under this warranty and returned to Surron shall become the property of Surron.

12.4

Limitations on Warranty

The limited warranty described in the Warranty information pages is the only warranty which applies to your motorcycle at New Zealand. Surron makes no other warranty or guarantee of any kind expressed or implied. No implied warranties of merchantability or fitness for a particular purpose or any purpose, is applicable to any product sold by Surron buyer and all other parties who contract with Surron, hereby specifically and knowledgeably waive any and all warranties, expressed or implied. This limited warranty does not cover any incidental or consequential damages, including loss of value of the motorcycle, Lost profits or earnings, out-of-pocket expenses for substitute transportation etc., expenses associated with returning the covered product back to its owner, mechanic's travel time or communication charges, loss or damage to personal property, loss or time, or inconvenience. Surron has the right to continuously upgrade the design and electric system or improve not limited to the motorcycle, power system or battery pack. Some countries do not allow limitations on how long an implied warranty lasts, so the above limitations may not apply to you. also excluded from this warranty are any incidental or consequential damages including loss of use. This warranty gives you specific legal rights, and you may also have other rights, which vary, from situation by situation. The contents stated herein are subject to change without notice.

12.5

12.5

Disclaimer

Surron is not responsible for any losses arising from an owner's intentional misuse, gross negligence, unauthorised modifications (such as abnormal system logs, mismatched hardware identification codes, or abnormal performance parameters), use of uncertified accessories, or operations exceeding design specifications. In cases of damage caused by manufacturing or design defects, Surron will offer appropriate remedies, including repair, replacement, or refund, depending on the situation. For claims related to personal injury, property damage, or emotional distress, Surron shall be exempt from liability to the maximum extent allowed by law.

For products distributed via specialised sales channels, such as equipment designed for competitive use, Surron's liability is confined exclusively to manufacturing defects. The owner acknowledges and accepts that participation in competitions, use in racing environments, professional modifications, or any other conditions surpassing typical consumer use, as well as their resulting outcomes, are entirely the owner's responsibility.

Unauthorised reverse engineering, decompilation, or alteration of the electrical control system without prior written approval from Surron is considered a contract violation. In cases of minor infractions, such as non-commercial individual modifications, Surron retains the authority to demand an immediate halt to the activity and issue a formal warning. For major infractions, such as commercial-scale reproduction or sales, the company may seek legal injunctions and claim damages. These damages will be calculated as either the official retail price of the affected product model per instance of violation or the actual financial loss suffered by Surron, whichever amount is greater. The official retail price at the time of the infraction will serve as the basis for this calculation. Furthermore, Surron reserves the right to confirm modification activities on the owner's device through remote diagnostics or direct inspections, requiring full collaboration from the owner.

By using this product, the owner consents to the installation of a GPS tracking system for verifying its location and grants Surron permission to periodically check its usage region. In cases of unauthorised use, the owner will be required to pay a penalty amounting to three times the product's retail price. Additionally, Surron reserves the right to remotely disable the product's functionality immediately. The company accepts no responsibility for any usage in jurisdictions where additional legal obligations or liabilities may arise.

How to Obtain Warranty Service

To receive any type of warranty service, take your Surron motorcycle and warranty registration proof to any authorised Surron dealer during normal service hours. Local dealers can be found at: sur-ron.co.nz/pages/local-dealers-nz.

12.6

12.6

If you believe that your vehicle has a defect that could cause a collision, injury, or death, you should immediately inform Surron or your authorised Surron dealer. If you fail to meet or do not comply with the conditions and scope of the warranty terms, we can still provide repair services upon request at a charge.

If you are unable to obtain satisfactory warranty service from a Surron dealer, or if you are dissatisfied with a warranty decision, please send an email to: **sales@sur-ron.co.nz.**

We will require the following information to assist you:

- Your details: Name, email address, and phone number
- Nature of the problem
- Invoice details: Full itemised invoice including product model and date of purchase
- Dealer and vehicle details: Selling dealer name and Vehicle Identification Number (VIN)

1000km **3 Month**

Odometer reading		Performed by		Date	

MAINTENANCE RECORD

REMARKS

2000km **6 Month**

Odometer reading		Performed by		Date	

MAINTENANCE RECORD

REMARKS

4000km **9 Month**

Odometer reading		Performed by		Date	

MAINTENANCE RECORD

REMARKS

6000km **12 Month**

Odometer reading		Performed by		Date	

MAINTENANCE RECORD

REMARKS

10000km **18 Month**

Odometer reading		Performed by		Date	

MAINTENANCE RECORD

REMARKS

14000km **24 Month**

Odometer reading		Performed by		Date	

MAINTENANCE RECORD

REMARKS

After-sales Services Record Sheet					
	Odometer reading	Warranty item	Performed by	Date	Remark
1					
2					
3					
4					
5					

After-sales services record sheet					
	Odometer reading	Warranty item	Performed by	Date	Remark
6					
7					
8					
9					
10					

Annex

TECHNICAL DETAILS	
Spec	QL2000DY-3
VEHICLE MODEL	Hyper Bee 2026
Dimension	1500×680×885mm
Ground clearance	240-260mm
Seat height	685mm (adjustable range 665~705mm)
Dry/Curb weight	39kg
Carrying capacity	55kg
Front Tire	Front offroad tire-60/100-14
Rear Tire	Rear offroad tire-70/100-12
Assistant function	REGEN + Remote control + Emergency power off (Magnetic type) + SAWC system
Wheel base	1035mm
Front fork travel	170mm
Ear shock/Wheel travel	60/185mm
Power system	Mid-drive PMSM motor + FOC sine wave MCU
Rated power	2KW
Maximum power	8KW
Maximum torque	185N.m
Top speed	65km/h
Range	56km(@40km/h)
Battery Type	58.08V/22Ah lithium-ion battery pack
Riding mode	Riding mode level 1/2/3 Reverse Mode
Charge time	3.5h
Frame design	Aluminum forged frame

-FETCH LIGHT-飞起来-

Annex

13.11